Standard mounting instructions for mounting basic UniSonic Booth.

For options and accessories, see the corresponding assembly instructions.

US_U-SDR_vs1.23012025 - U-profile door frame single door
US_U-DDR_vs1.23012025 - U-profile door frame double door
US_AI_vs1.23012025 - Air-inlet,
US_AO_vs1.23012025 - Air-outlet,
US_IS_vs1.23012025 - Interlock system for Laserbooth,

SDRL_vs1.23012025 - Single door, left turning
SDRR_vs1.23012025 - Single door, right turning
DDR_vs1.23012025 - Double door

Hammer drill

Drilling machine

Leveler tool

Sealant gun

tape measure

Bit SQD 2

Ladder (2x)

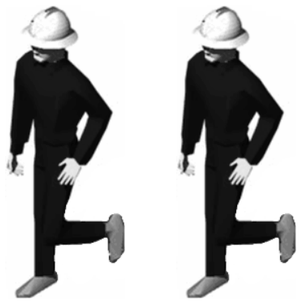

Minimum 2 persons

Floor anchors
(Excl.)

Filling plates
(Excl.)

OR

Filling wedge plate
(Excl.)

Acrylic kit sealant
(Gray)

	NAME	DATE	SIZE A3	CEPRO LEADING IN WELDING SAFETY	CEPRO International B.V. Provinciënbaan 16, 5121 DL Rijen - The Netherlands
DRAWN	mark	23-1-2025			
CHECKED	MH	23-1-2025	REV 1	UniSonic booth	
TOLERANCES ACCORDING TO ISO2768-1			SCALE:		
projection	UNLESS OTHERWISE SPECIFIED DIMENSIONS ARE IN MILLIMETERS ANGLES ±X.X° 2 PL ±X.XX 3 PL ±X.XXX			Mounting instruction	
					Sheet 1 of 7

G:\tekeningen\UniSonic cabinebouw\Montage instructie\US_vs123012025 Standaard montage tekening UniSonic cabine.dft

See your project lay-out for booth dimensions and locations of the doors, windows etc.

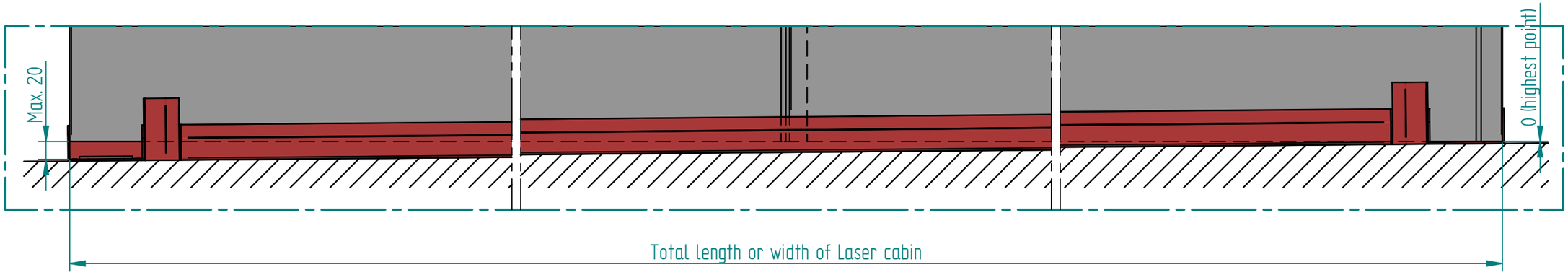

principle of levelling

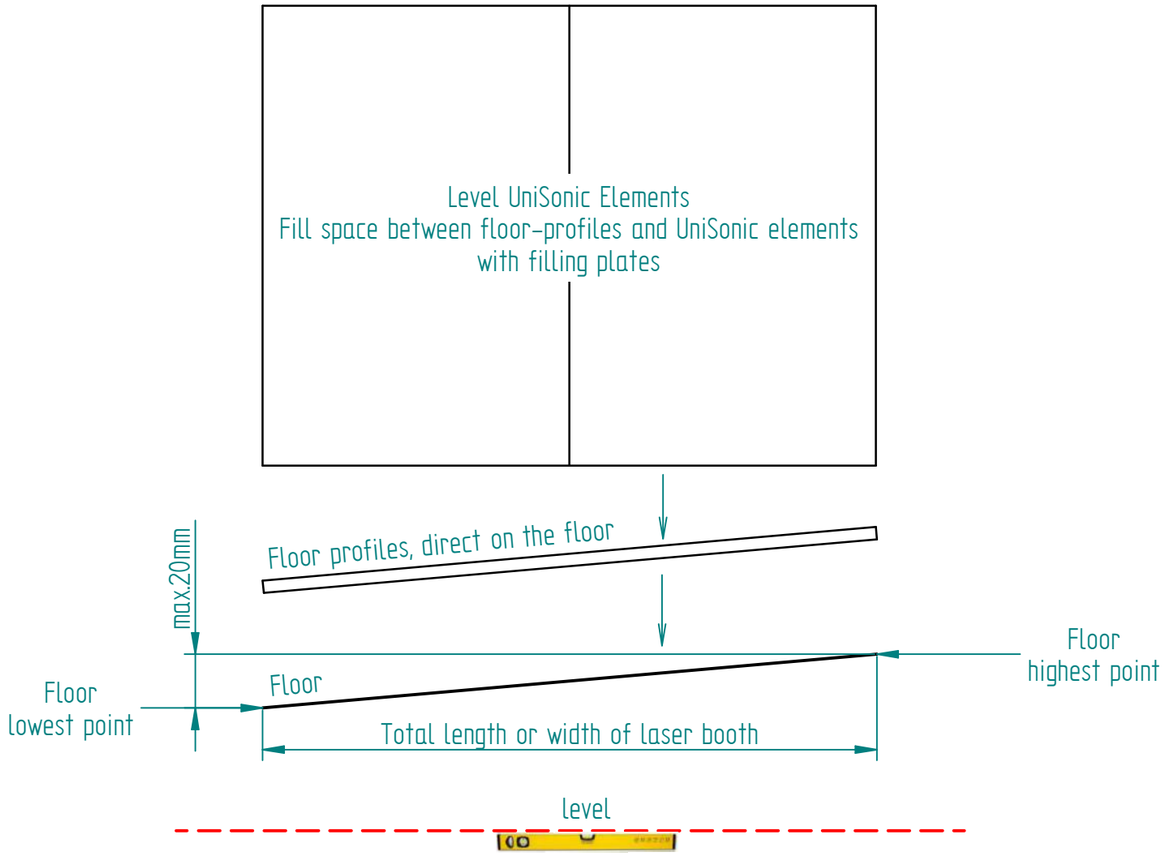

Filling plates

Step 1 - Floor profiles UniSonic booth

Lay out the floor-profiles on a flat floor. Max. height difference of the floor is 20 mm, over the surface of the cabin. Measure diagonally to check whether the profiles are 90°. Make sure that the floor-profiles fit well on the floor without gaps. Fix the profiles to the floor. (Anchors not included).

	NAME	DATE	SIZE
DRAWN	mark	23-1-2025	A3
CHECKED	MH	23-1-2025	REV 1
TOLERANCES ACCORDING TO ISO2768-1			SCALE:

projection

UNLESS OTHERWISE SPECIFIED
DIMENSIONS ARE IN MILLIMETERS
ANGLES ±X.X°
2 PL ±X.XX 3 PL ±X.XXX

CEPRO LEADING IN WELDING SAFETY

CEPRO International B.V.
Provinciënbaan 16, 5121 DL
Rijen - The Netherlands

UniSonic booth

Mounting instruction

Sheet 2 of 7

G:\tekeningen\UniSonic cabinebouw\Montage instructie\US_vs123012025 Standaard montage tekening UniSonic cabine.dft

See your project lay-out for booth dimensions and locations of the doors, windows etc.

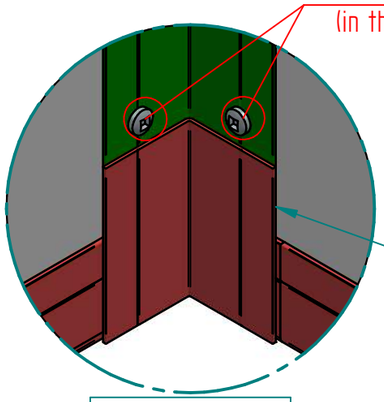

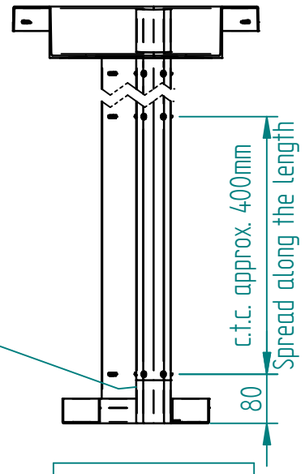

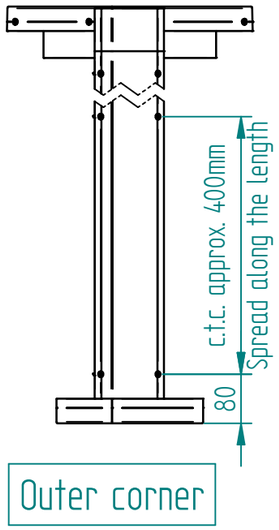

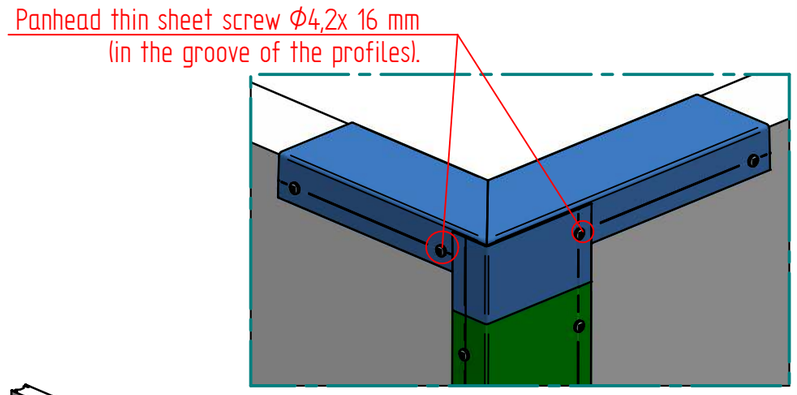

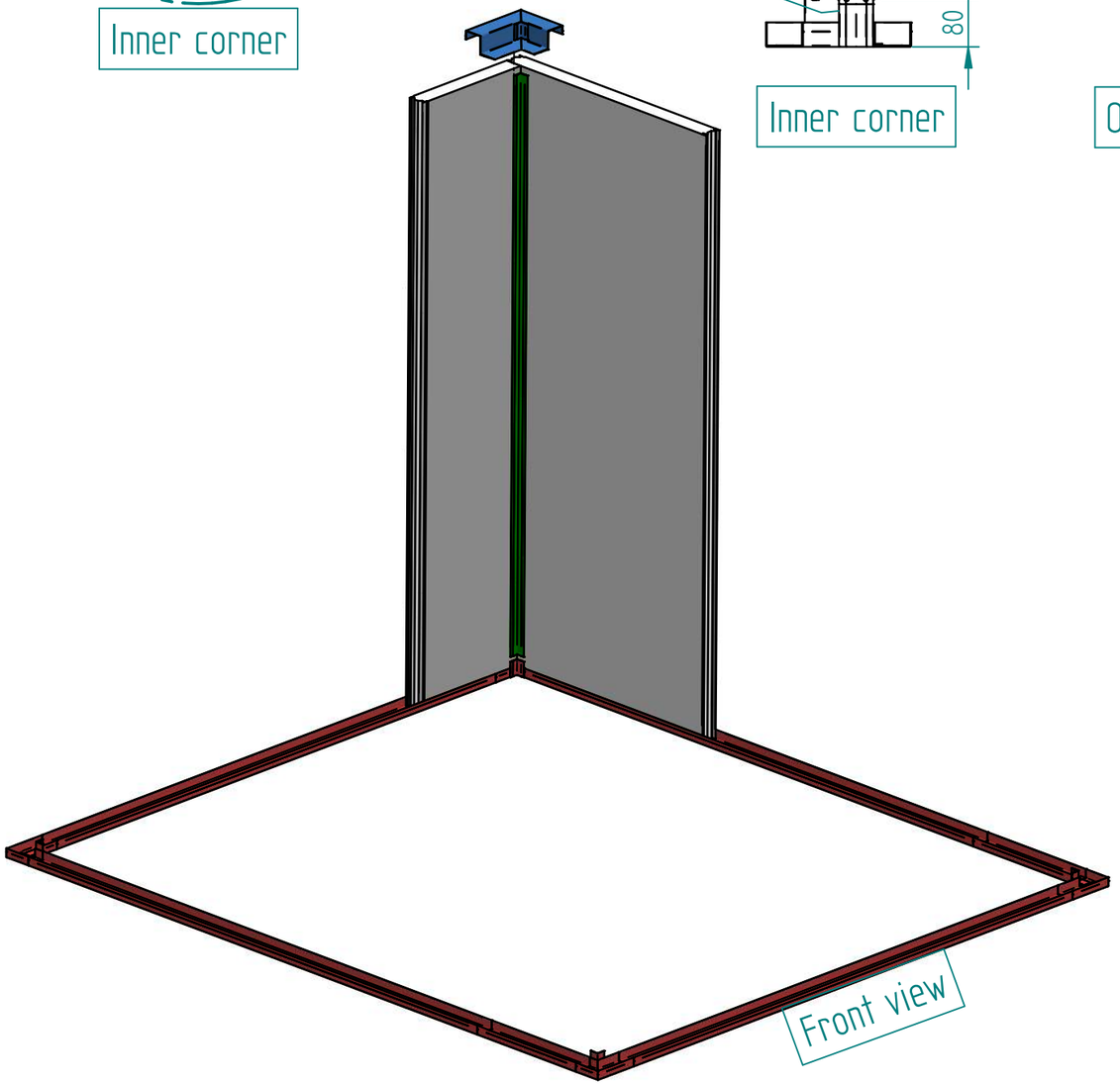

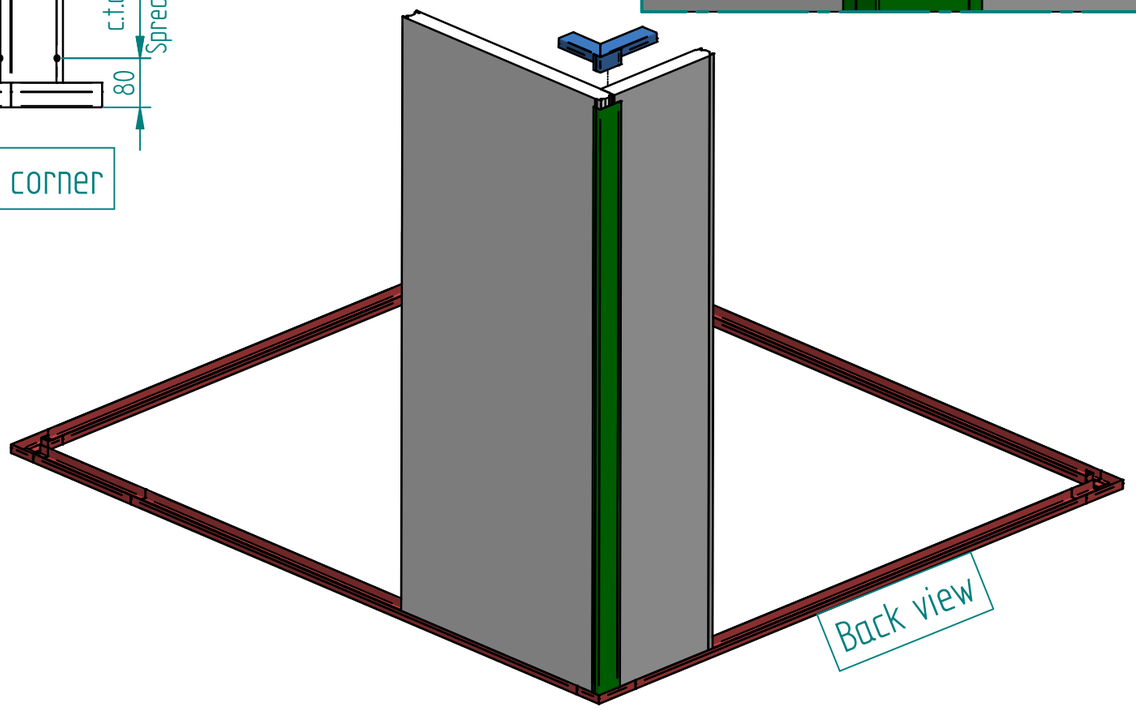

Step 2 - 1.st corner UniSonic booth

Start in the corner (highest point) with placing two UniSonic elements and make sure they are level. If the floor is not level, fill out gap between floor-profile and UniSonic element with filling plates.
Clamp the corner L-profiles between the floor corner-piece and roof rack corner-piece, and screw these in place with Panhead thin sheet screws (in the groove of the profiles).

	NAME	DATE	SIZE A3	CEPRO LEADING IN WELDING SAFETY	CEPRO International B.V. Provinciënbaan 16, 5121 DL Rijen - The Netherlands
DRAWN	mark	23-1-2025			
CHECKED	MH	23-1-2025	REV 1	UniSonic booth	
TOLERANCES ACCORDING TO ISO2768-1			SCALE:		
projection	UNLESS OTHERWISE SPECIFIED DIMENSIONS ARE IN MILLIMETERS ANGLES ±X.X° 2 PL ±X.XX 3 PL ±X.XXX			Mounting instruction	
				Sheet 3 of 7	

G:\tekeningen\UniSonic cabinebouw\Montage instructie\US_vs1.23012025 Standaard montage tekening UniSonic cabine.dft

See your project lay-out for booth dimensions and locations of the doors, windows etc.

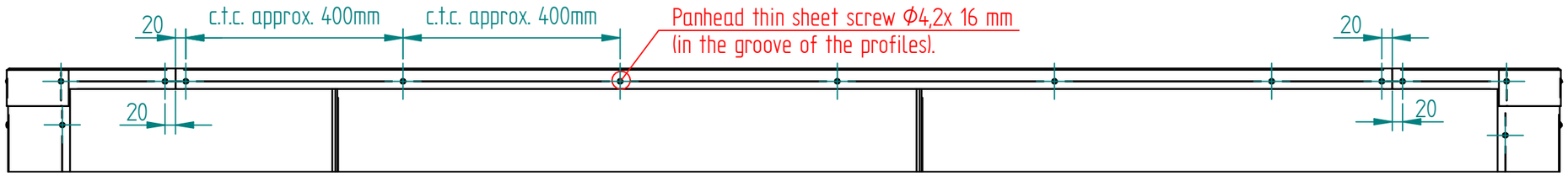

Back view

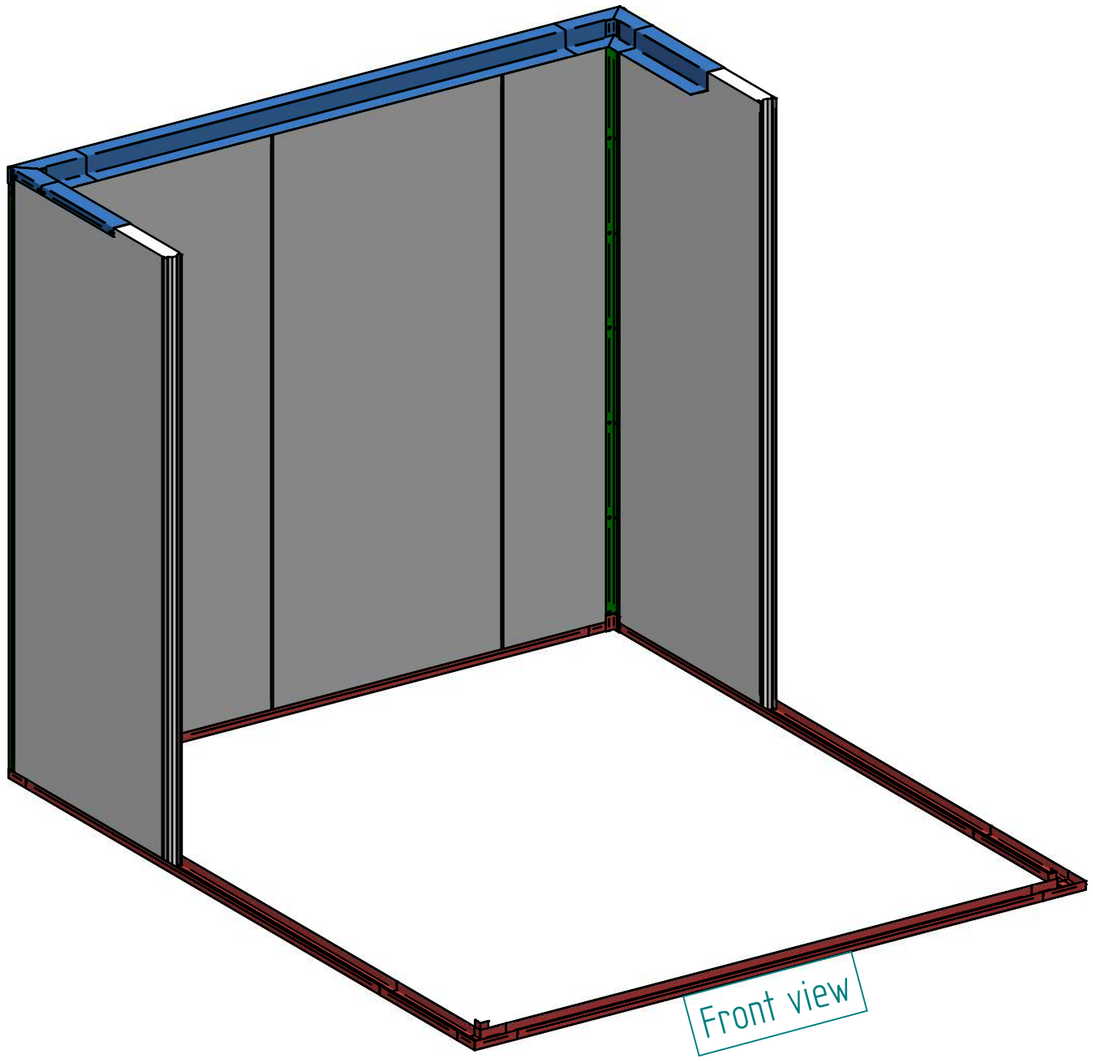

Front view

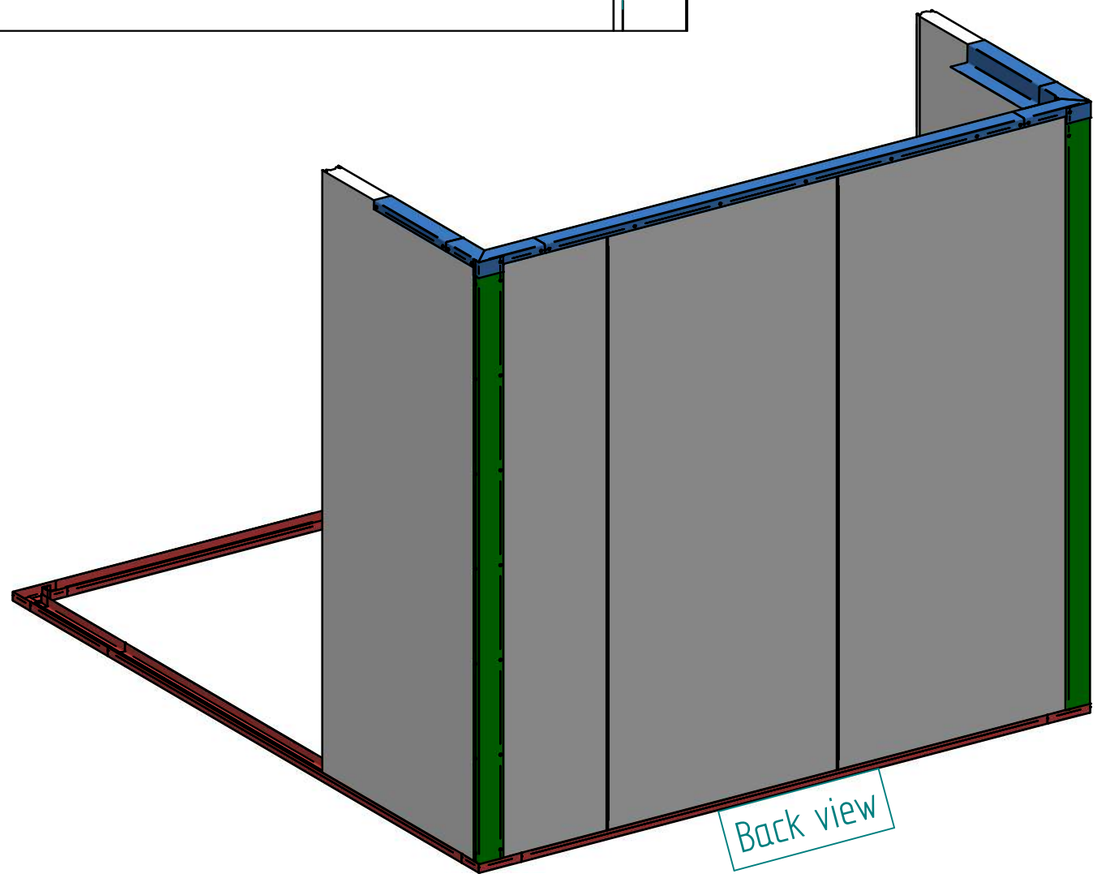

Back view

Step 3 - Back wall / corner UniSonic booth

Place the UniSonic elements of the back wall and next corner. Make sure they are level. If the floor is not level, fill out gap between floor-profile and UniSonic element with filling plates.
Clamp the corner L-profiles between the floor corner piece and roof rack corner piece. And screw these in place with Panhead thin sheet screws (in the groove of the profiles).

	NAME	DATE	SIZE	CEPRO International B.V. Provincienbaan 16, 5121 DL Rijen - The Netherlands
DRAWN	mark	23-1-2025	A3	
CHECKED	MH	23-1-2025	REV 1	UniSonic booth
TOLERANCES ACCORDING TO ISO2768-1			SCALE:	
projection	UNLESS OTHERWISE SPECIFIED DIMENSIONS ARE IN MILLIMETERS ANGLES ±X.X° 2 PL ±X.XX 3 PL ±X.XXX			Mounting instruction
				Sheet 4 of 7

G:\tekeningen\UniSonic cabinebouw\Montage instructie\US_vs123012025 Standaard montage tekening UniSonic cabine.dft

See your project lay-out for booth dimensions and locations of the doors, windows etc.

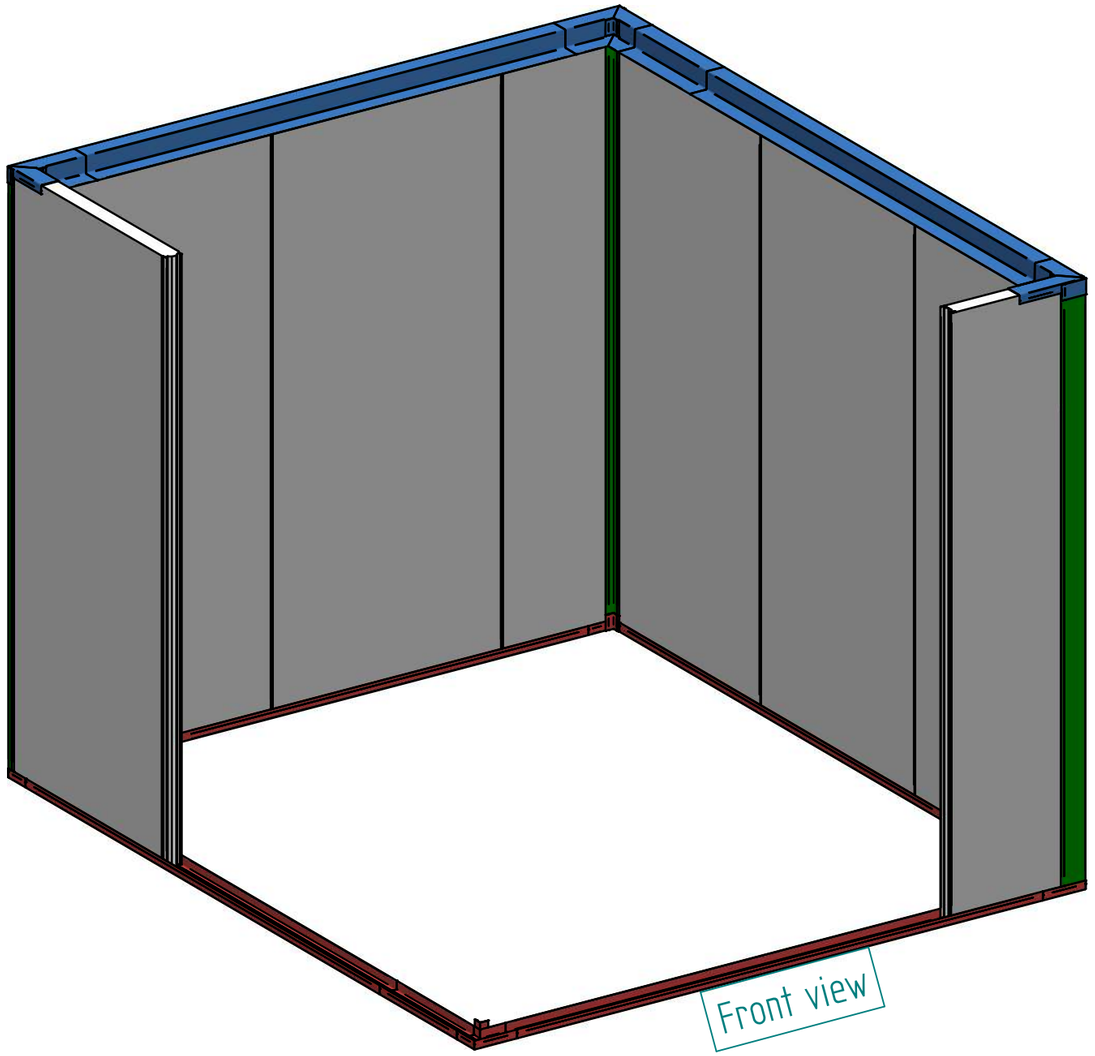

Step 4 - Right side wall and 3.rd corner UniSonic booth

Place the UniSonic elements of the back wall and 3rd corner. Make sure they are level. If the floor is not level, fill out gap between floor-profile and UniSonic element with filling plates.
Clamp the corner L-profiles between the floor corner piece and roof rack corner piece. And screw these in place with Panhead thin sheet screws (in the groove of the profiles).

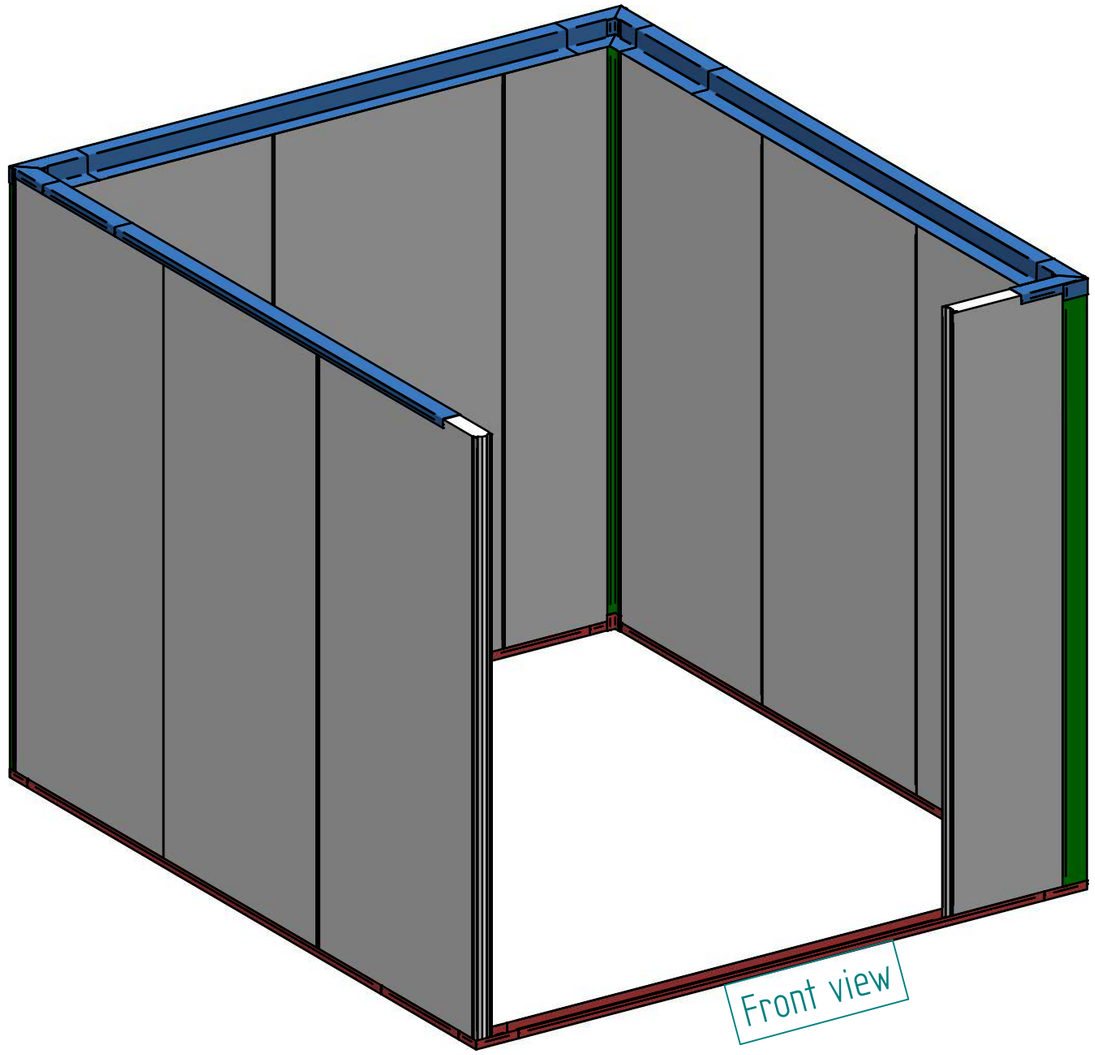

Step 5 - Side wall UniSonic booth

Place the UniSonic elements of the side wall. Make sure they are level. If the floor is not level, fill out gap between floor-profile and UniSonic element with filling plates.
Clamp the corner L-profiles between the floor corner piece and roof rack corner piece. And screw these in place with Panhead thin sheet screws (in the groove of the profiles).

	NAME	DATE	SIZE	
DRAWN	mark	23-1-2025	A3	CEPRO International B.V. Provinciënbaan 16, 5121 DL Rijen - The Netherlands
CHECKED	MH	23-1-2025	REV 1	UniSonic booth
TOLERANCES ACCORDING TO ISO2768-1			SCALE:	

projection

UNLESS OTHERWISE SPECIFIED DIMENSIONS ARE IN MILLIMETERS ANGLES ±X.X° 2 PL ±X.XX 3 PL ±X.XXX

Mounting instruction

Sheet 5 of 7

G:\tekeningen\UniSonic cabinebouw\Montage instructie\US_vs1.23012025 Standaard montage tekening UniSonic cabine.dft

See your project lay-out for booth dimensions and locations of the doors, windows etc.

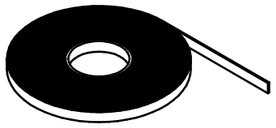

Insulation tape 3 x 30 mm

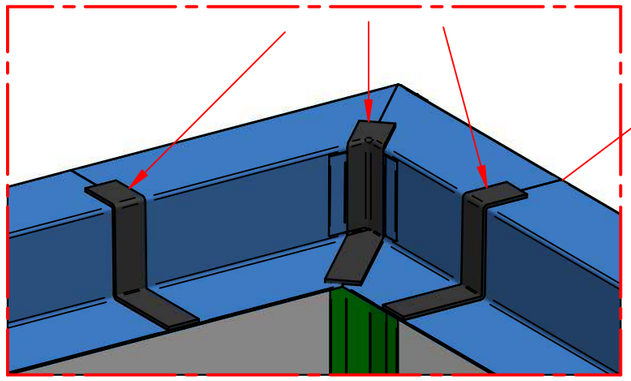

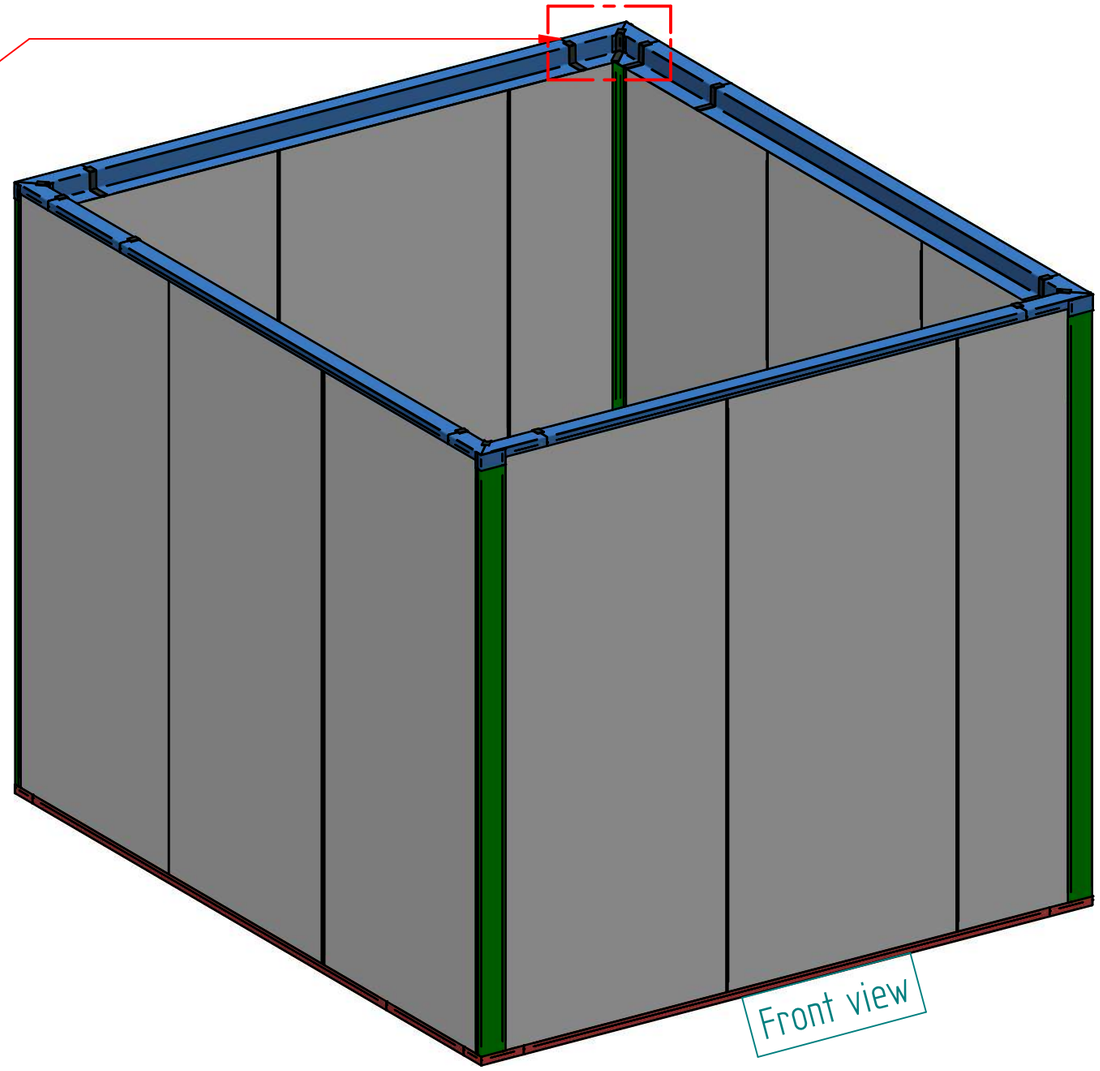

Front view

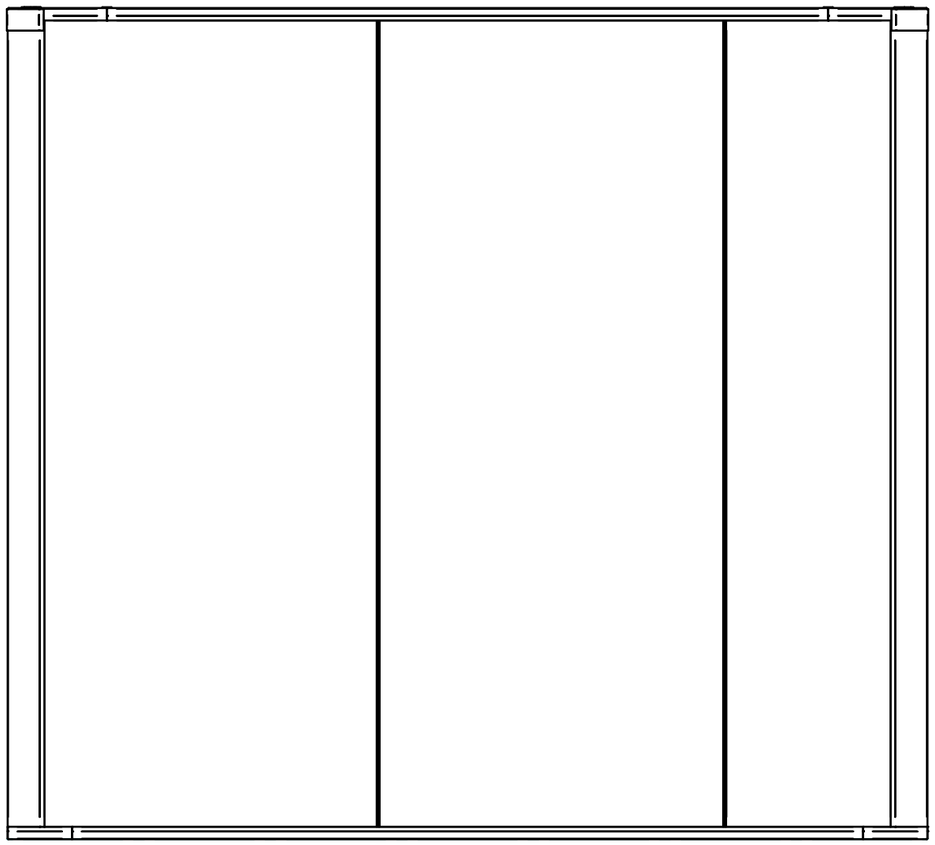

Front view

Step 7 – Insulating tape on roof profiles

Seal all seams on top between the roof rack-profile with self-adhesive insulation tape.

Step 6 – 4.th corner & front wall UniSonic booth

Place the UniSonic elements of the front wall and last corner. Make sure they are level. If the floor is not level, fill out gap between floor-profile and UniSonic element with filling plates.
Clamp the corner L-profiles between the floor corner piece and roof rack corner piece. And screw these in place with Panhead thin sheet screws (in the groove of the profiles).

	NAME	DATE	SIZE
DRAWN	mark	23-1-2025	A3
CHECKED	MH	23-1-2025	REV 1
TOLERANCES ACCORDING TO ISO2768-1			SCALE:

projection

UNLESS OTHERWISE SPECIFIED DIMENSIONS ARE IN MILLIMETERS ANGLES ±X.X° 2 PL ±X.XX 3 PL ±X.XXX

CEPRO LEADING IN WELDING SAFETY

CEPRO International B.V.
Provinciënbaan 16, 5121 DL
Rijen – The Netherlands

UniSonic booth

Mounting instruction

Sheet 6 of 7

G:\tekeningen\UniSonic cabinebouw\Montage instructie\US_vs1.23012025 Standaard montage tekening UniSonic cabine.dft

See your project lay-out for booth dimensions and locations of the doors, windows etc.

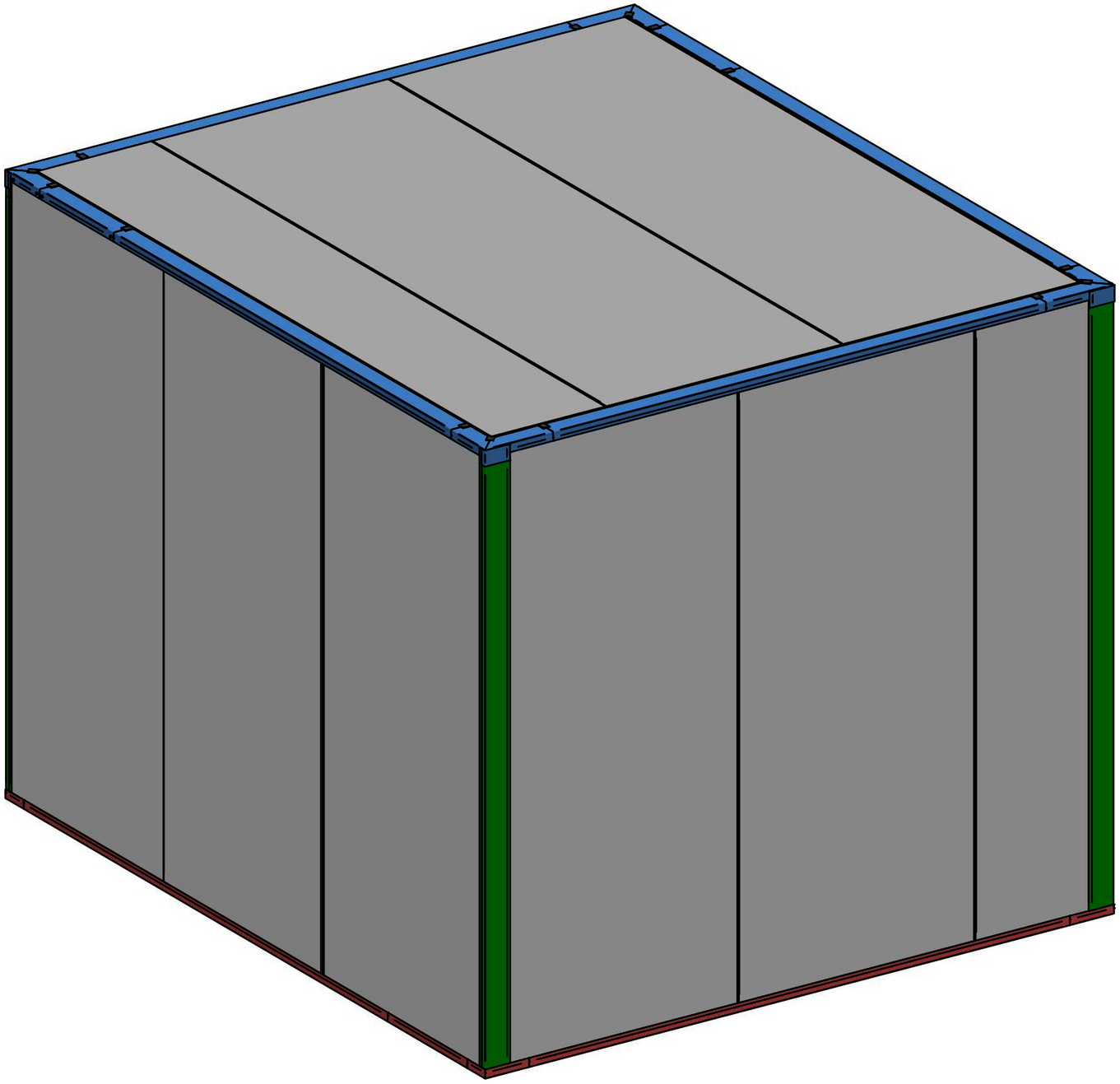

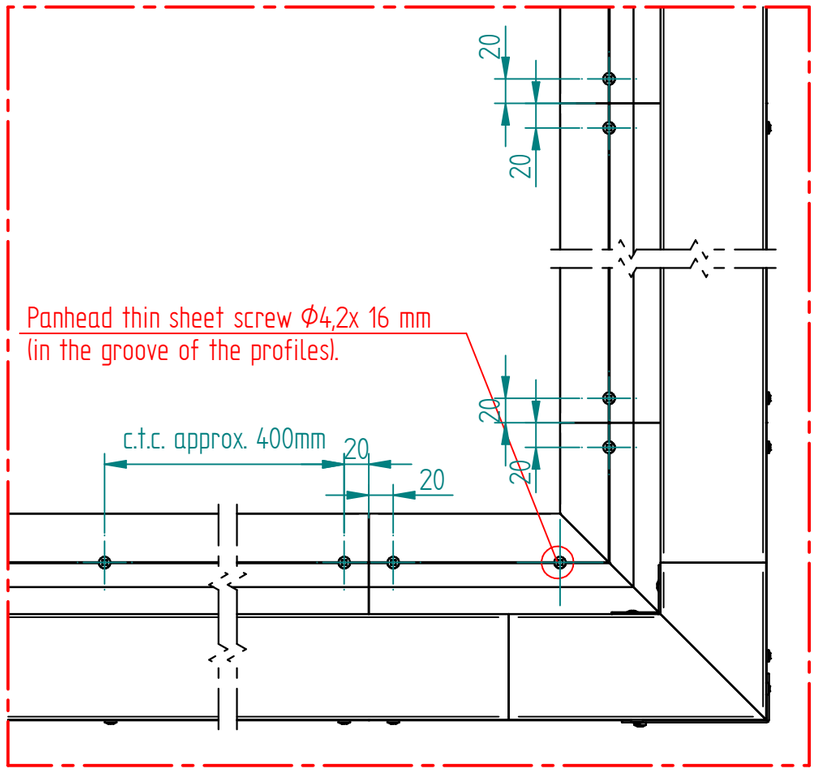

Bottom inside view

Screw all roof panels to the roof rack profiles.

Step 8 – Mounting roof panel on UniSonic booth

Place the roof panel on the cabin. Start with the whole UniSonic elements and end with the made to size UniSonic element.
Screw the UniSonic elements to the roof rackprofiles from the inside with Panhead thin sheet screw. (in the groove of the profiles).

	NAME	DATE	SIZE	
DRAWN	mark	23-1-2025	A3	CEPRO International B.V. Provincienbaan 16, 5121 DL Rijen – The Netherlands
CHECKED	MH	23-1-2025	REV 1	UniSonic booth
TOLERANCES ACCORDING TO ISO2768-1			SCALE:	
projection	UNLESS OTHERWISE SPECIFIED DIMENSIONS ARE IN MILLIMETERS ANGLES ±X.X° 2 PL ±X.XX 3 PL ±X.XXX			Mounting instruction
				Sheet 7 of 7

G:\tekeningen\UniSonic cabinebouw\Montage instructie\US_vs123012025 Standaard montage tekening UniSonic cabine.dft

See your project lay-out for booth dimensions and locations of the doors, windows etc.

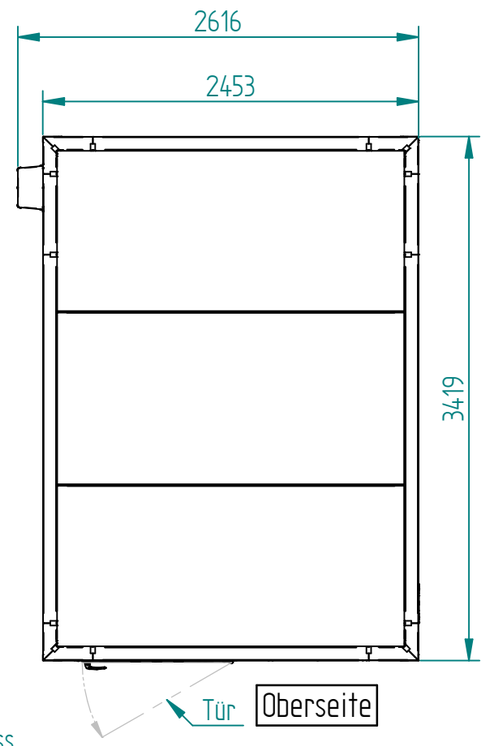

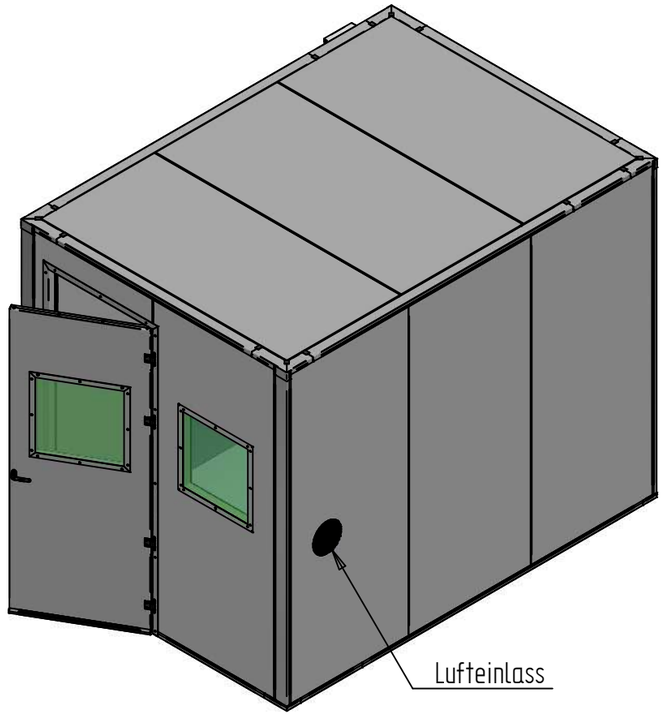

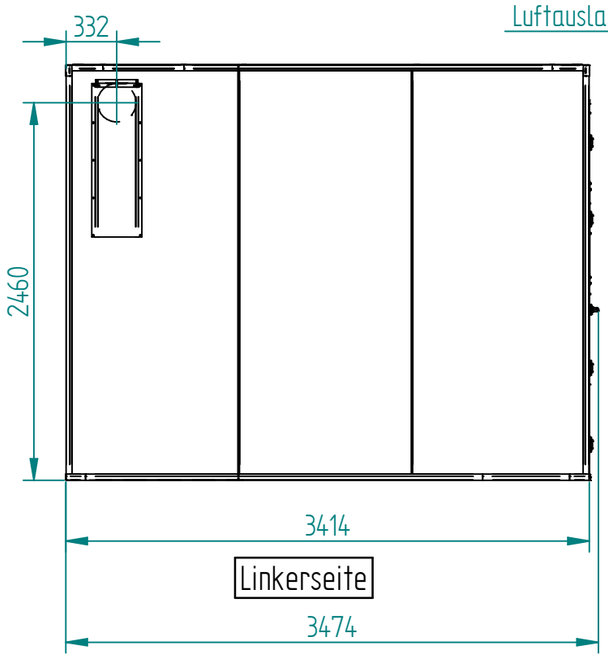

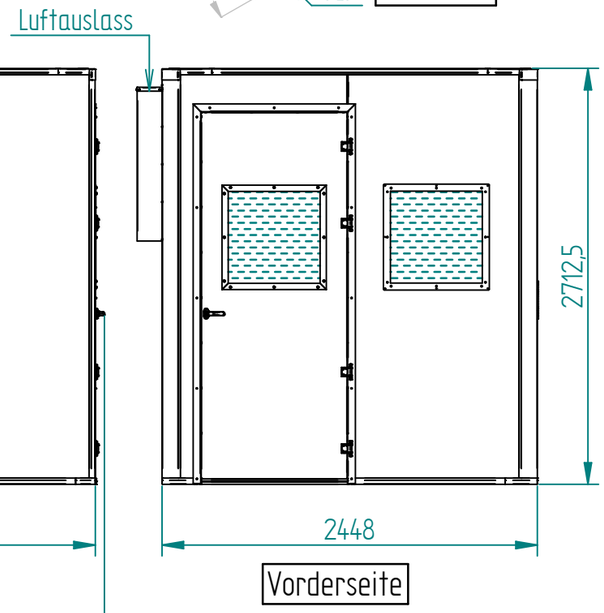

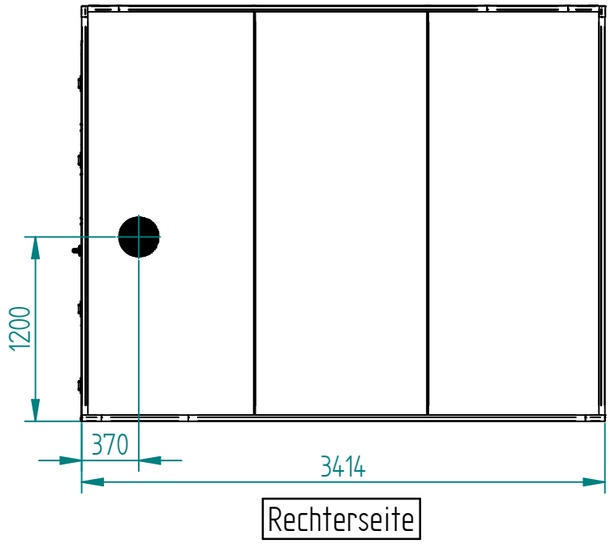

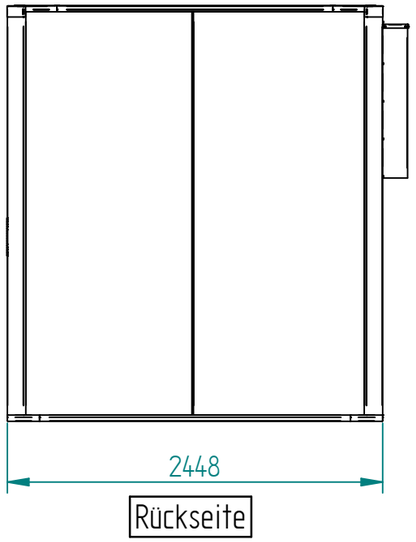

Ausgestattet mit;
- Farbe: RAL9006
- 1 Wandpaneele mit Fenster 60x60 cm.
- Doppeltür mit Anti-Panik-Verschluss.
- Ein Fenster 60x60 cm in Türblatt.
- Jedes Fenster mit einem Laserfenster ausgestattet.
- Ausgestattet mit einem Lufteinlass/-auslass mit Abdeckung.

	NAME	DATE	SIZE
DRAWN	MdJ	28-1-2025	A3
CHECKED	GvdW	31-1-2025	REV 1
WEIGHT:			
TOLERANCES ACCORDING TO ISO2768-1			SCALE:

projection

UNLESS OTHERWISE SPECIFIED
DIMENSIONS ARE IN MILLIMETERS
ANGLES ±X.X°
2 PL ±X.XX 3 PL ±X.XXX

CEPRO® LEADING IN WELDING SAFETY

CEPRO International B.V.
Provinciënbaan 16, 5121 DL
Rijen - The Netherlands

Montage UniSonic cabine 3,4 x 2,7 m.
Heidenbluth Ostring 16 Fuldabruck

Ordernr.: 3250400098
Delivery: Woche 7 - 2025

Sheet 1 of 9

G:\Dossiers vanaf 2016\UniSonic\Duitsland\2025\Heidenbluth Ostring 16 Fuldabruck\3250400098 _Montage UniSonic Laser cabine 2444 x 3,410 x 2,740 m_rev-0.dft

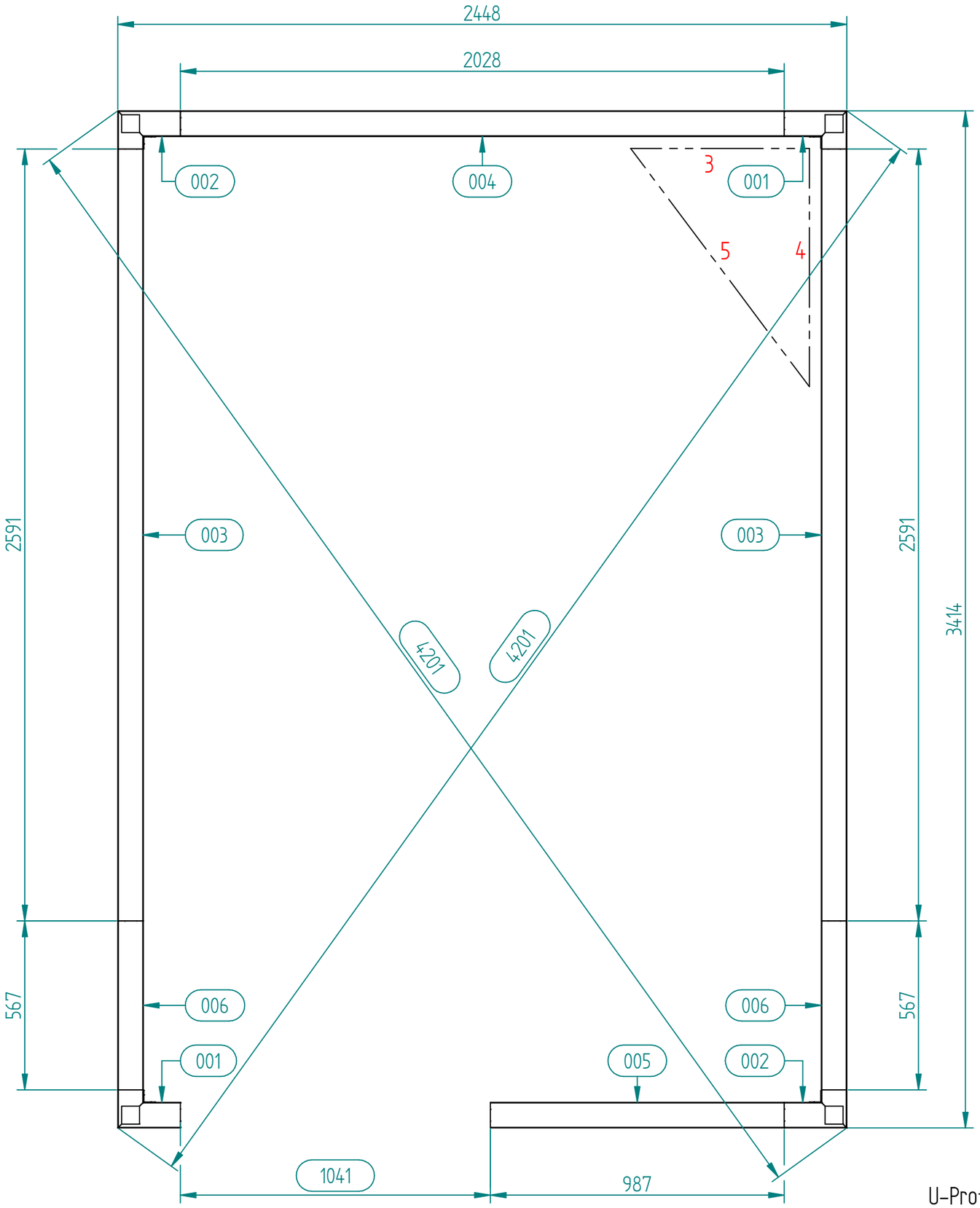

U-Profil Bodenprofile Kabine

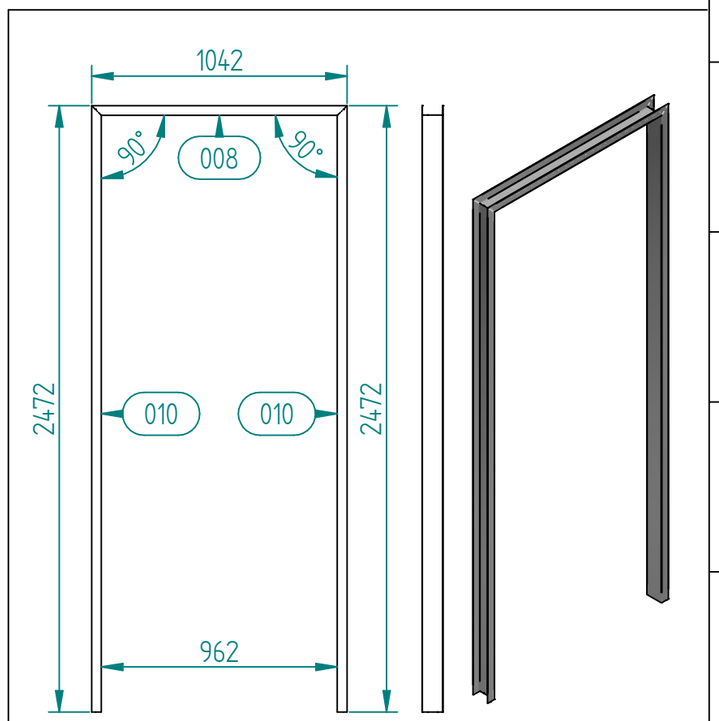

U-Profil Türrahmen Kabine

	NAME	DATE	SIZE
DRAWN	MdJ	28-1-2025	A3
CHECKED	GvdW	31-1-2025	REV 1
WEIGHT:			
TOLERANCES ACCORDING TO ISO2768-1			SCALE:

CEPRO LEADING IN WELDING SAFETY

CEPRO International B.V.
Provincienbaan 16, 5121 DL
Rijen - The Netherlands

Montage UniSonic cabine 3,4 x 2,7 m.
Heidenbluth Ostring 16 Fuldabruck

projection

UNLESS OTHERWISE SPECIFIED
DIMENSIONS ARE IN MILLIMETERS
ANGLES ±X.X°
2 PL ±X.XX 3 PL ±X.XXX

Ordernr.: 3250400098
Delivery: Woche 7 - 2025

Sheet 2 of 9

G:\Dossiers vanaf 2016\UniSonic\Duitsland\2025\Heidenbluth Ostring 16 Fuldabruck\3250400098 _Montage UniSonic Laser cabine 2444 x 3,410 x 2,740 m_rev-0.dft

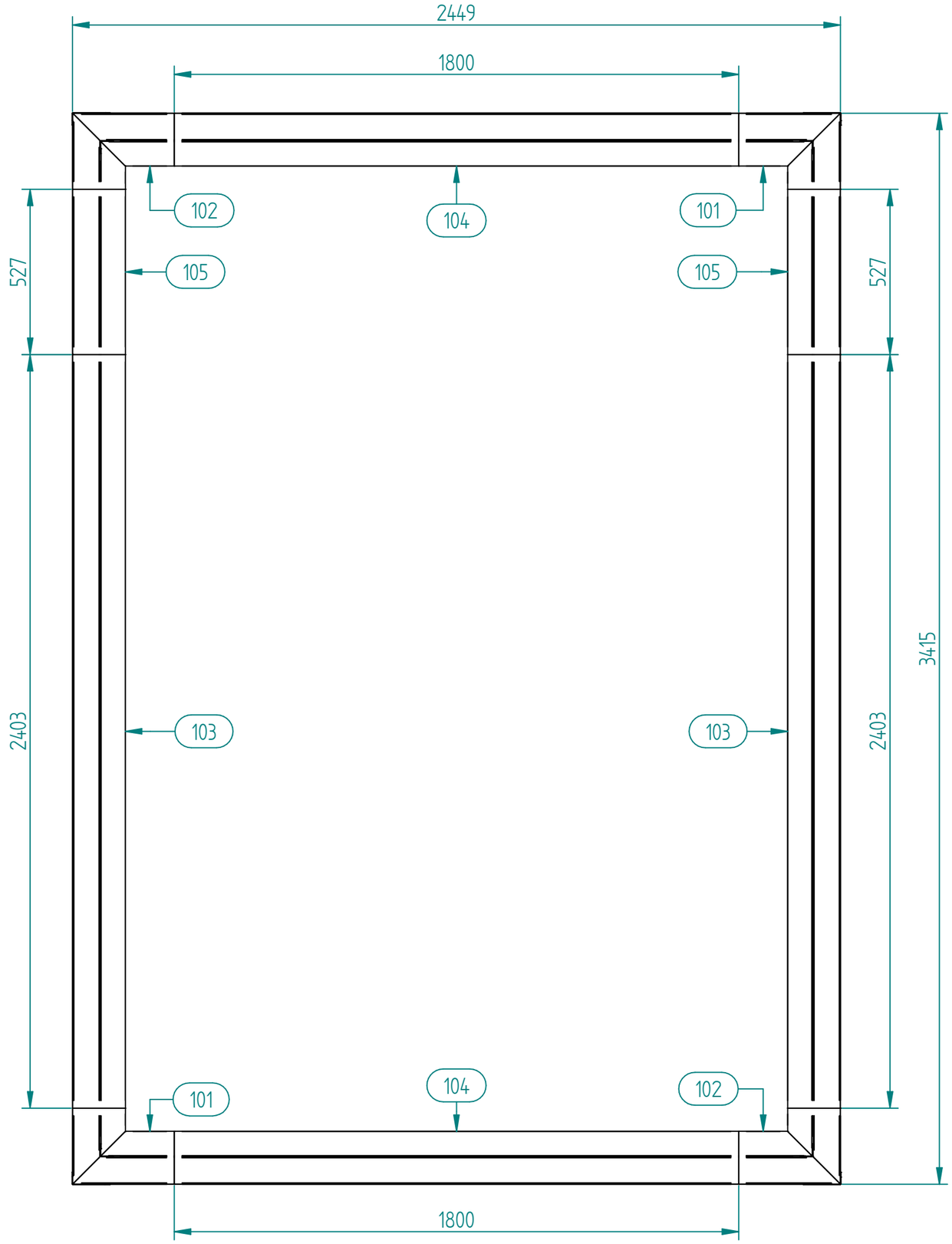

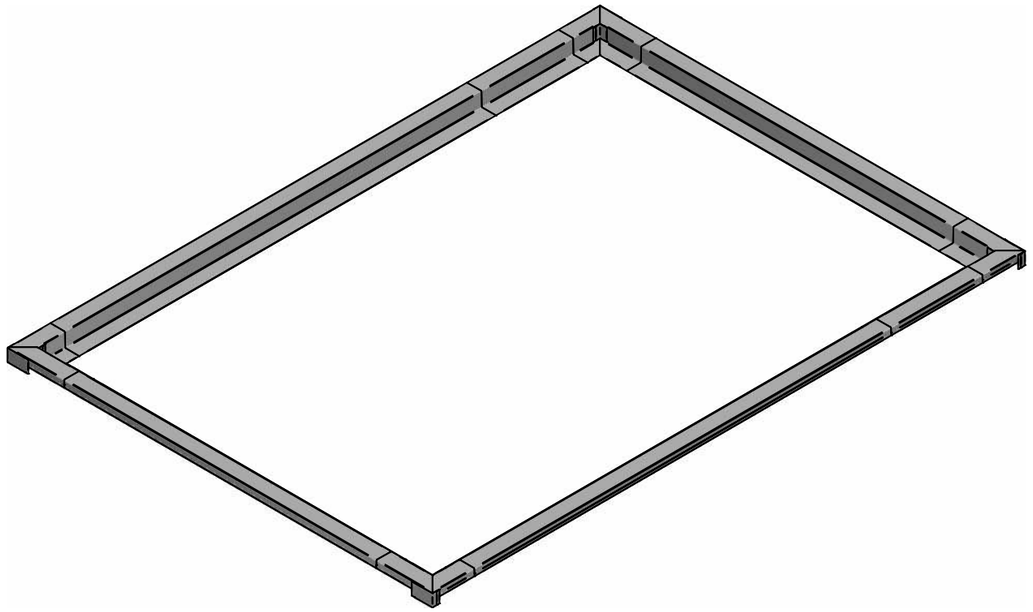

Dachrandprofile Kabine

	NAME	DATE	SIZE
DRAWN	MdJ	28-1-2025	A3
CHECKED	GvdW	31-1-2025	REV 1
	WEIGHT:		
TOLERANCES ACCORDING TO ISO2768-1			SCALE:

CEPRO LEADING IN WELDING SAFETY

CEPRO International B.V.
Provincienbaan 16, 5121 DL
Rijen - The Netherlands

Montage UniSonic cabine 3,4 x 2,7 m.
Heidenbluth Ostring 16 Fuldabruck

projection

UNLESS OTHERWISE SPECIFIED
DIMENSIONS ARE IN MILLIMETERS
ANGLES ±X.X°
2 PL ±X.XX 3 PL ±X.XXX

Ordernr.: 3250400098
Delivery: Woche 7 - 2025

Sheet 3 of 9

G:\Dossiers vanaf 2016\UniSonic\Duitsland\2025\Heidenbluth Ostring 16 Fuldabruck\3250400098 _Montage UniSonic Laser cabine 2444 x 3,410 x 2,740 m_rev-0.dft

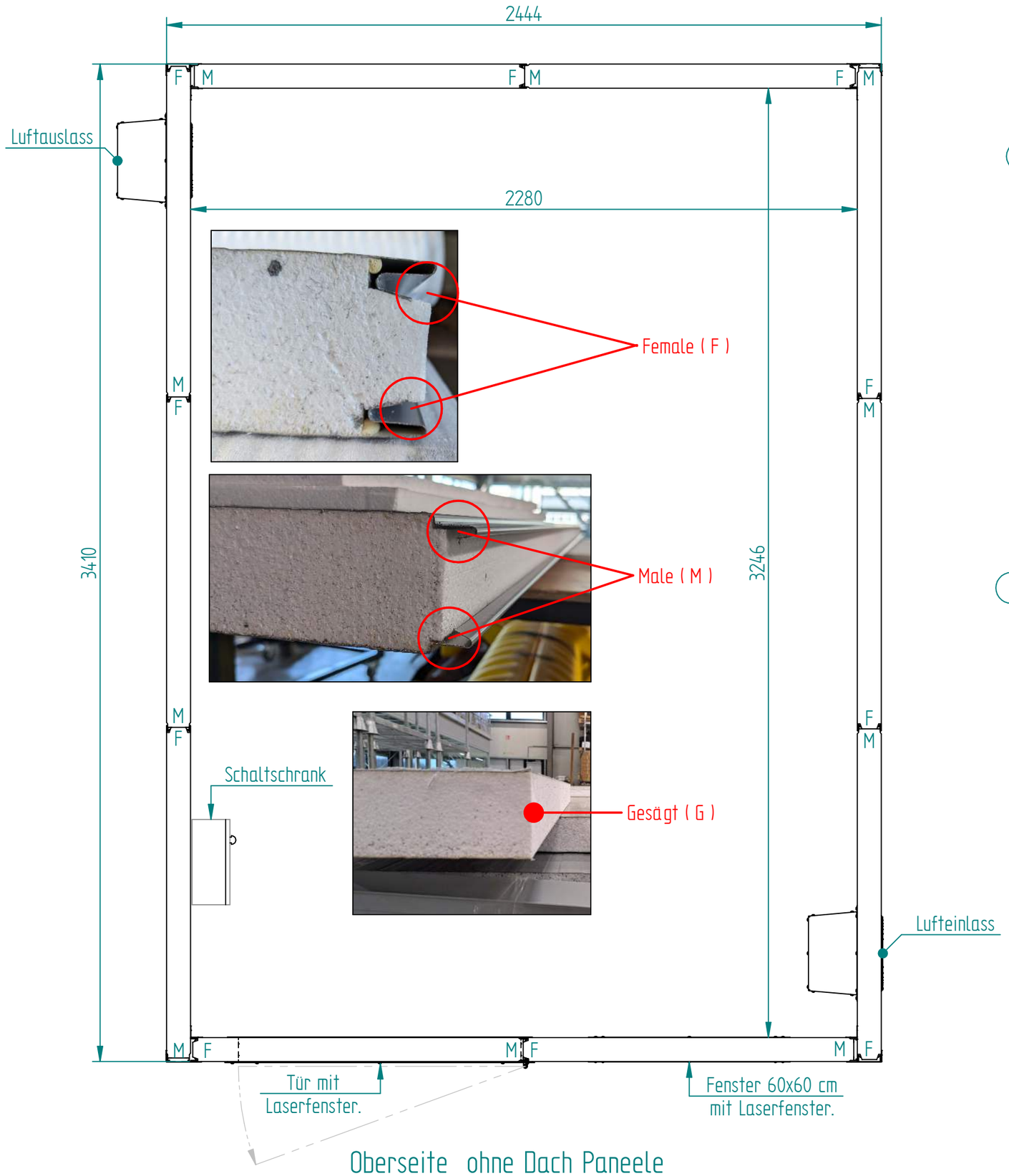

Oberseite ohne Dach Paneele

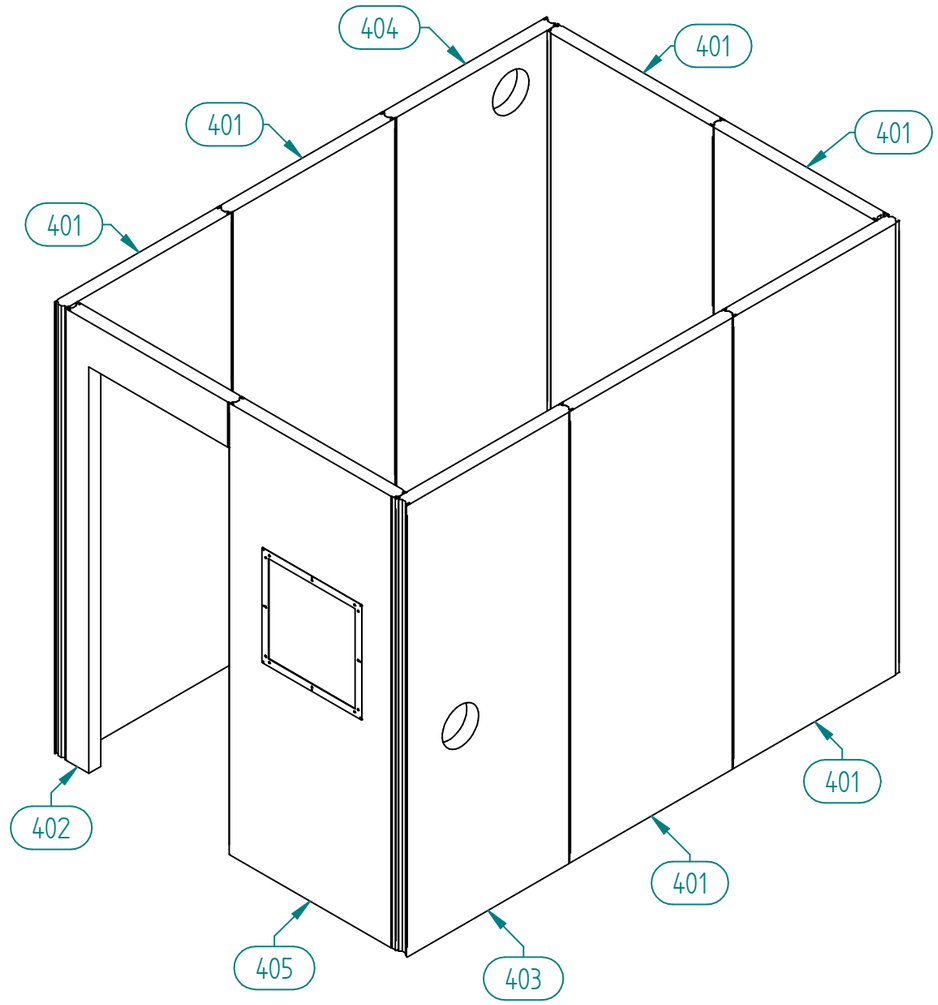

F = Frau
M = Mann
G = Gesägt

Wandpaneele Kabine

	NAME	DATE	SIZE
DRAWN	MdJ	28-1-2025	A3
CHECKED	GvdW	31-1-2025	REV 1
	WEIGHT:		
TOLERANCES ACCORDING TO ISO2768-1			SCALE:

projection

UNLESS OTHERWISE SPECIFIED
DIMENSIONS ARE IN MILLIMETERS
ANGLES ±X.X°
2 PL ±X.XX 3 PL ±X.XXX

CEPRO® LEADING IN WELDING SAFETY

CEPRO International B.V.
Provinciënbaan 16, 5121 DL
Rijen - The Netherlands

Montage UniSonic cabine 3,4 x 2,7 m.
Heidenbluth Ostring 16 Fuldabruck

Ordernr.: 3250400098
Delivery: Woche 7 - 2025

Sheet 4 of 9

G:\Dossiers vanaf 2016\UniSonic\Duitsland\2025\Heidenbluth Ostring 16 Fuldabruck\3250400098 _Montage UniSonic Laser cabine 2444 x 3,410 x 2,740 m_rev-0.dft

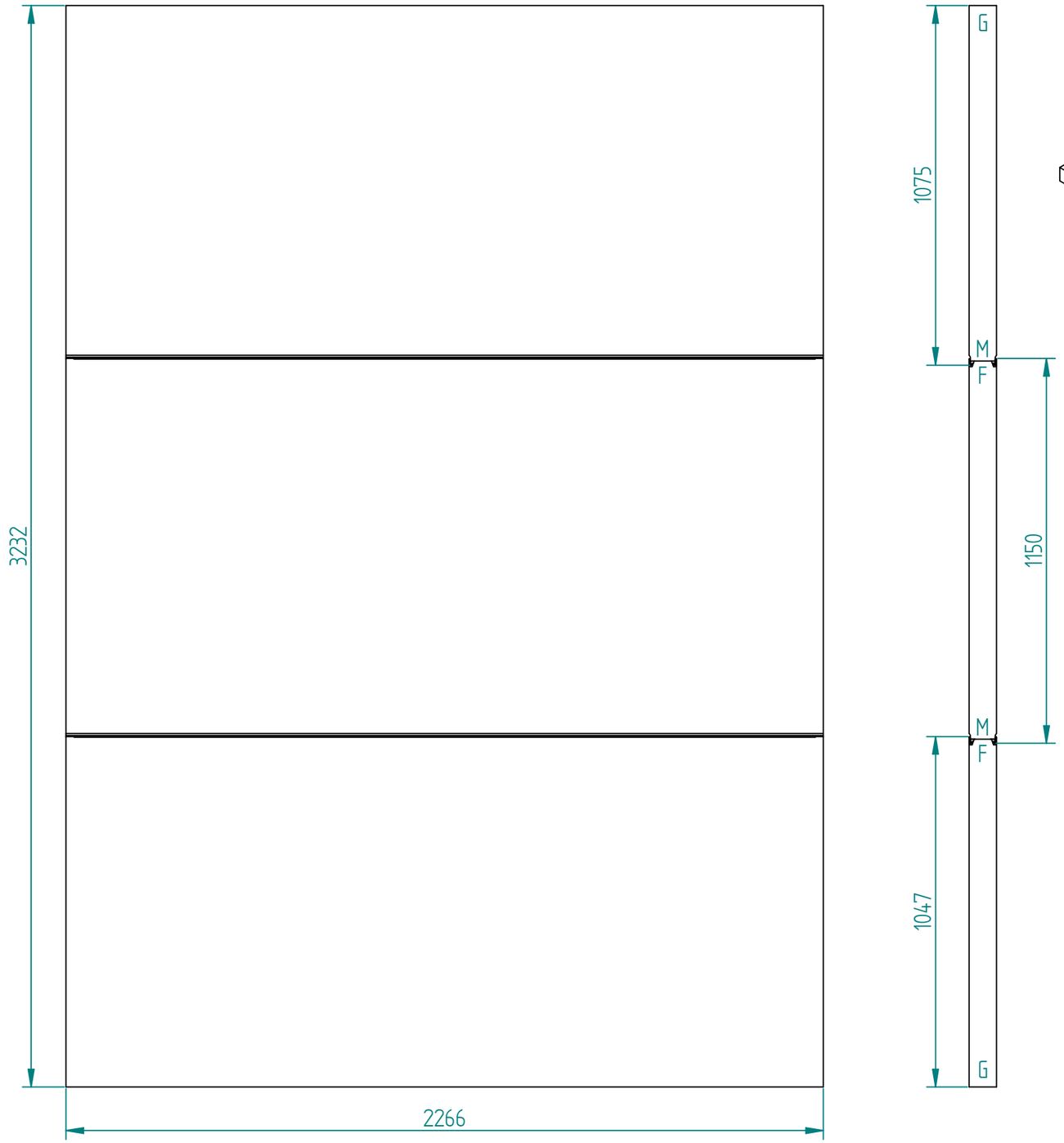

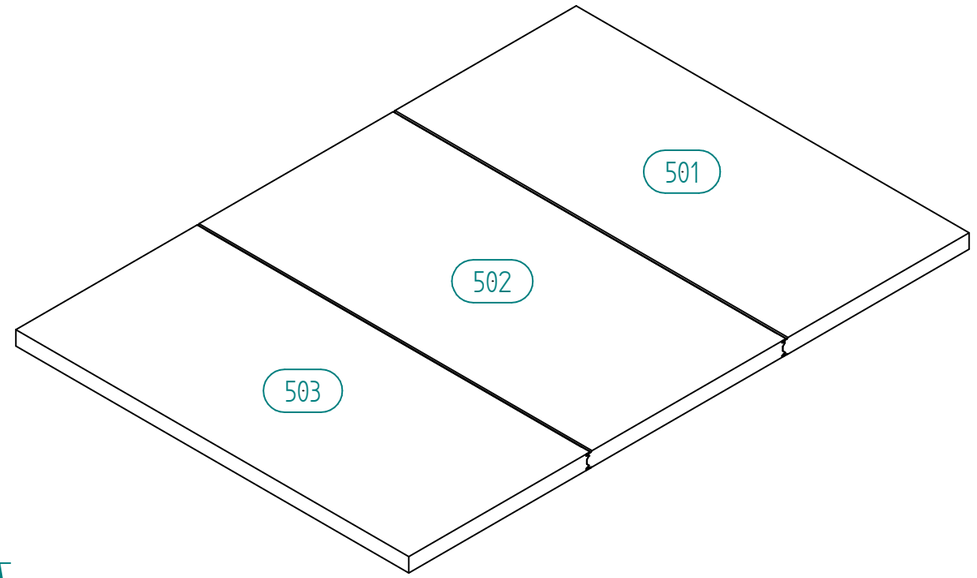

F = Frau
M = Mann
G = Gesägt

Dachpaneele Kabine

	NAME	DATE	SIZE
DRAWN	MdJ	28-1-2025	A3
CHECKED	GvdW	31-1-2025	REV 1
	WEIGHT:		
TOLERANCES ACCORDING TO ISO2768-1			SCALE:

projection

UNLESS OTHERWISE SPECIFIED
DIMENSIONS ARE IN MILLIMETERS
ANGLES ±X.X°
2 PL ±X.XX 3 PL ±X.XXX

CEPRO® LEADING IN WELDING SAFETY
CEPRO International B.V.
Provinciënbaan 16, 5121 DL
Rijen - The Netherlands

Montage UniSonic cabine 3,4 x 2,7 m.
Heidenbluth Ostring 16 Fuldabruck

Ordernr.: 3250400098
Delivery: Woche 7 - 2025

Sheet 5 of 9

G:\Dossiers vanaf 2016\UniSonic\Duitsland\2025\Heidenbluth Ostring 16 Fuldabruck\3250400098 _Montage UniSonic Laser cabine 2444 x 3,410 x 2,740 m_rev-0.dft

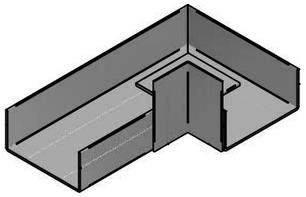

Pos.nr.	Zahl	Länge
001	2 st.	n.a.

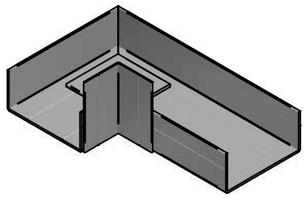

Pos.nr.	Zahl	Länge
002	2 st.	n.a.

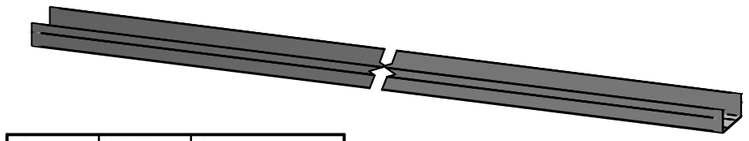

Pos.nr.	Zahl	Länge
003	2 st.	L=2591 mm
004	1 st.	L=2028 mm
005	1 st.	L= 987 mm
006	2 st.	L= 567 mm

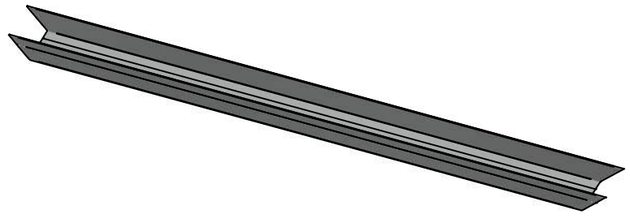

Pos.nr.	Zahl	Länge	Anmerkung
008	1 st.	L=1041 mm	2x Winkel 45°

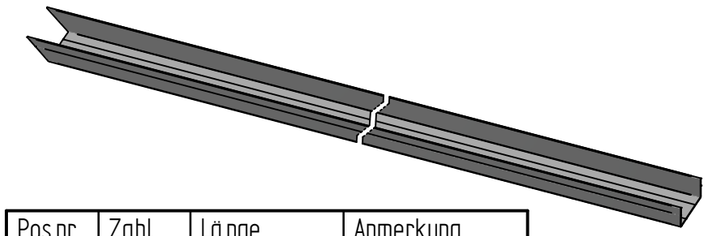

Pos.nr.	Zahl	Länge	Anmerkung
010	2 st.	L=2472 mm	1x Winkel 45°

U - Bodenprofile

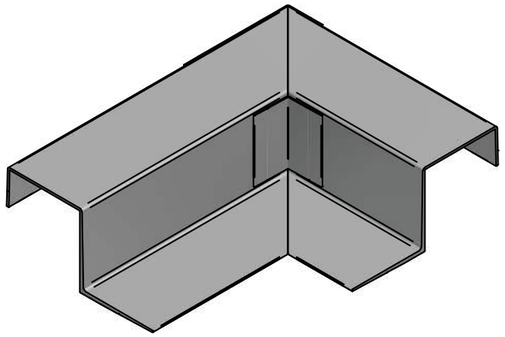

Pos.nr.	Zahl	Länge
101	2 st.	n.a.

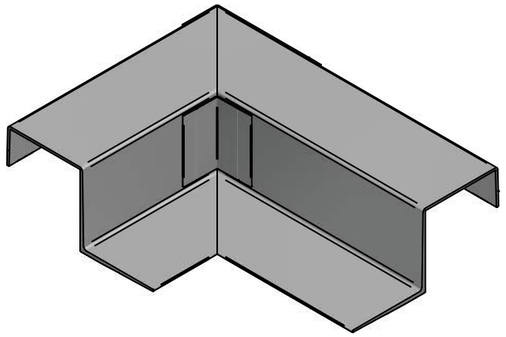

Pos.nr.	Zahl	Länge
102	2 st.	n.a.

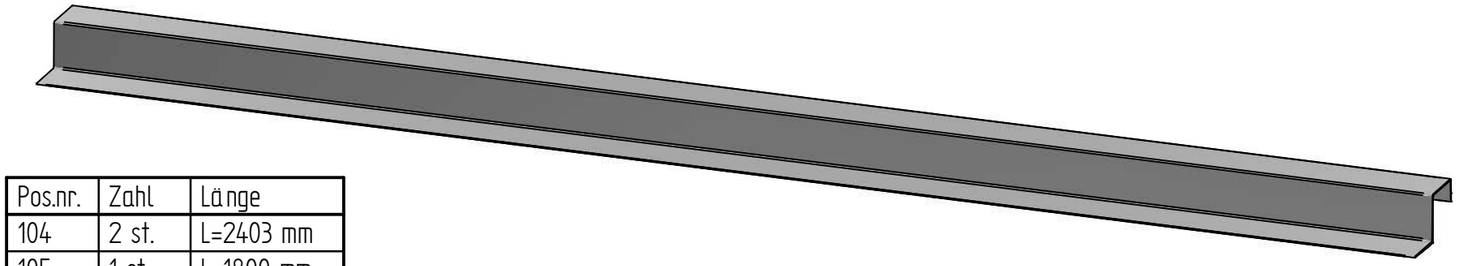

Pos.nr.	Zahl	Länge
104	2 st.	L=2403 mm
105	1 st.	L=1800 mm
106	2 st.	L= 527 mm

Dachrandprofile

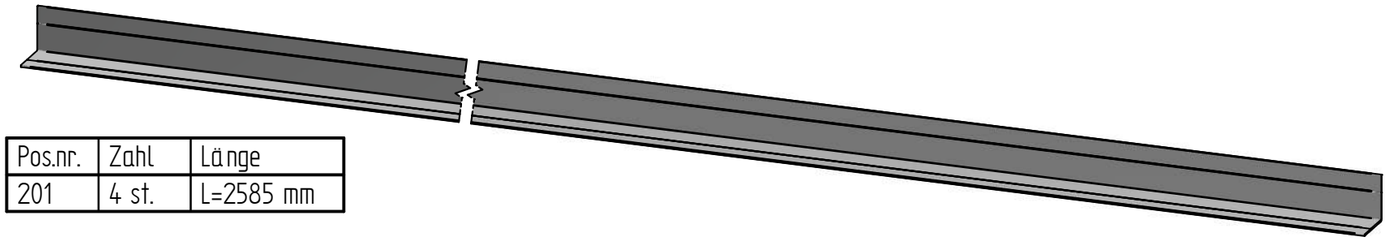

Pos.nr.	Zahl	Länge
201	4 st.	L=2585 mm

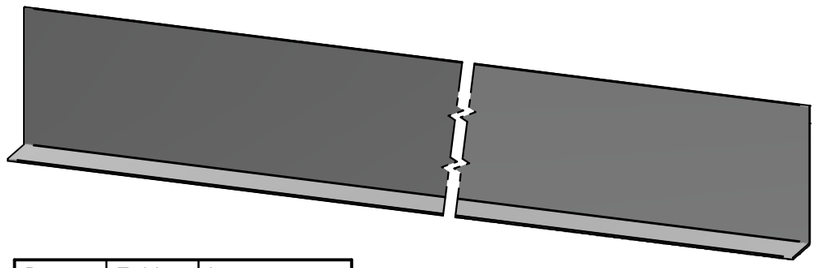

Pos.nr.	Zahl	Länge
301	4 st.	L=2629 mm

Eckprofile

	NAME	DATE	SIZE
DRAWN	MdJ	28-1-2025	A3
CHECKED	GvdW	31-1-2025	REV 1
	WEIGHT:		
TOLERANCES ACCORDING TO ISO2768-1			SCALE:

projection

UNLESS OTHERWISE SPECIFIED
DIMENSIONS ARE IN MILLIMETERS
ANGLES ±X.X°
2 PL ±X.XX 3 PL ±X.XXX

CEPRO International B.V.
Provincienbaan 16, 5121 DL
Rijen - The Netherlands

Montage UniSonic cabine 3,4 x 2,7 m.
Heidenbluth Ostring 16 Fuldabruck

Ordernr.: 3250400098
Delivery: Woche 7 - 2025

Sheet 6 of 9

G:\Dossiers vanaf 2016\UniSonic\Duitsland\2025\Heidenbluth Ostring 16 Fuldabruck\3250400098 _Montage UniSonic Laser cabine 2444 x 3,410 x 2,740 m_rev-0.dft

48.20.01.2705
Cepro UniSonic Paneel D80

Pos.nr.	Zahl	Länge
401	6 st.	L=2705 mm

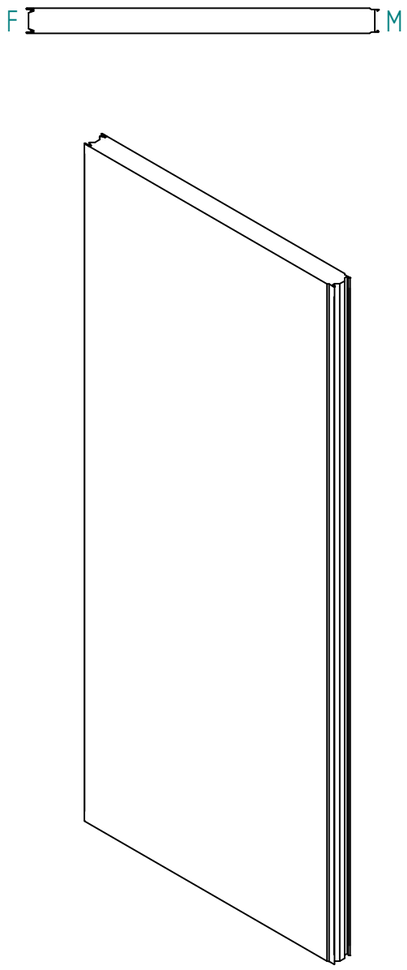

48.20.01.2705
Cepro UniSonic Türpaneel D80

Pos.nr.	Zahl	Länge
402	1 st.	L=2705 mm

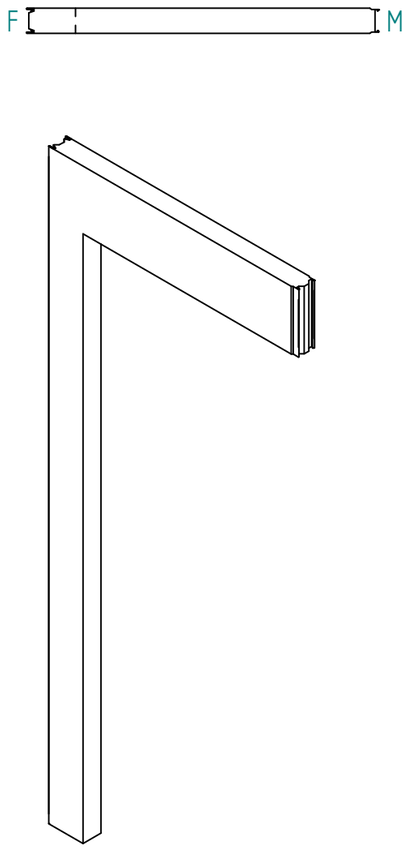

48.20.01.2705
Cepro UniSonic Paneel D80
mit Zulaufloch Φ 252 mm.

Pos.nr.	Zahl	Länge
403	1 st.	L=2705 mm

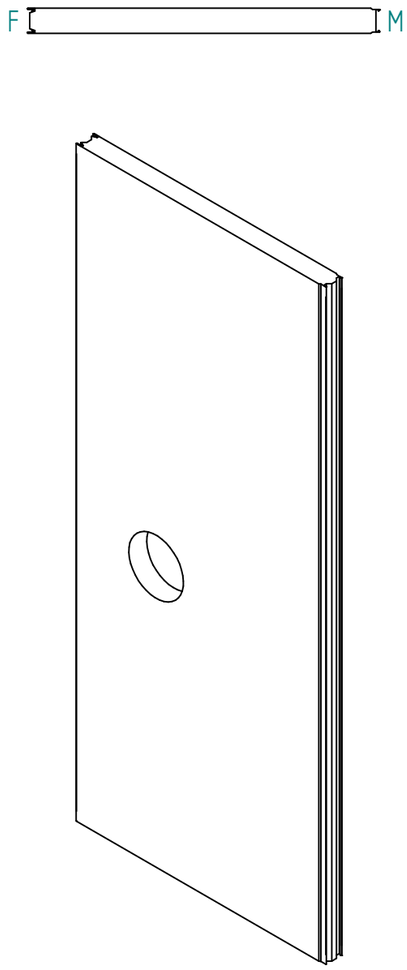

48.20.01.2705
Cepro UniSonic Paneel D80
mit Zulaufloch Φ 252 mm.

Pos.nr.	Zahl	Länge
404	1 st.	L=2705 mm

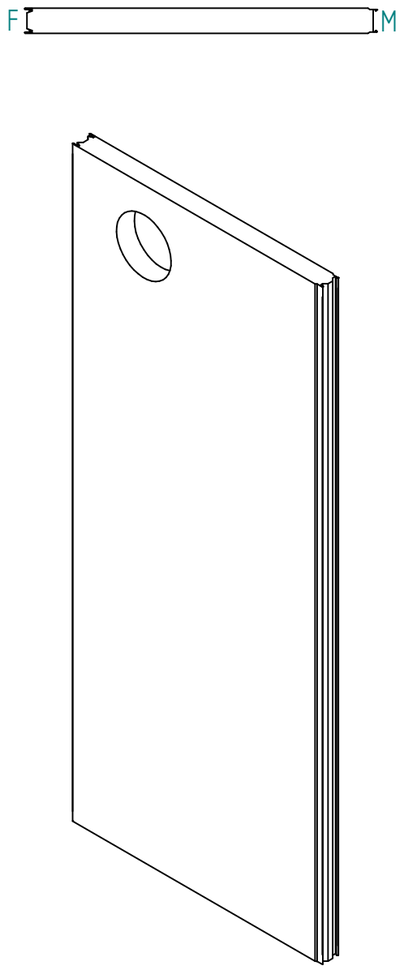

48.20.01.2705
Cepro UniSonic Paneel D80
mit Fensternische 60x60 cm

Pos.nr.	Zahl	Länge
405	1 st.	L=2705 mm

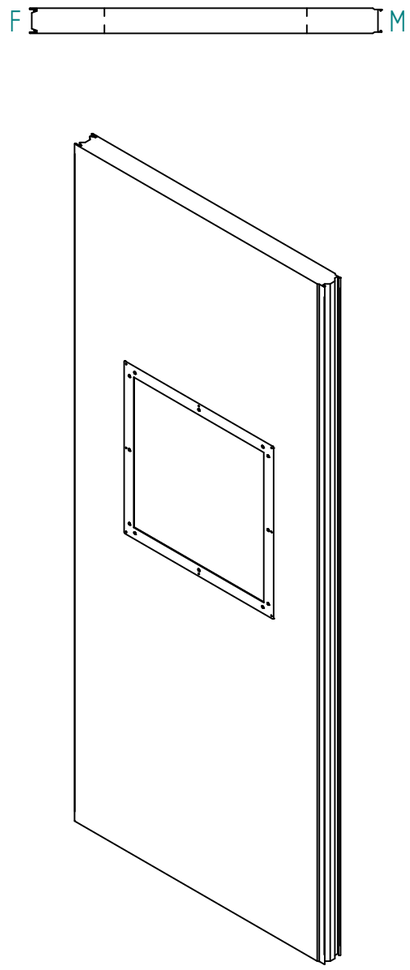

Wandpaneele

	NAME	DATE	SIZE
DRAWN	MdJ	28-1-2025	A3
CHECKED	GvdW	31-1-2025	REV 1
	WEIGHT:		
TOLERANCES ACCORDING TO ISO2768-1			SCALE:

projection

UNLESS OTHERWISE SPECIFIED
DIMENSIONS ARE IN MILLIMETERS
ANGLES ±X.X°
2 PL ±X.XX 3 PL ±X.XXX

CEPRO LEADING IN WELDING SAFETY

CEPRO International B.V.
Provincienbaan 16, 5121 DL
Rijen – The Netherlands

Montage UniSonic cabine 3,4 x 2,7 m.
Heidenbluth Ostring 16 Fuldabruck

Ordernr.: 3250400098
Delivery: Woche 7 – 2025

Sheet 7 of 9

G:\Dossiers vanaf 2016\UniSonic\Duitsland\2025\Heidenbluth Ostring 16 Fuldabruck\3250400098 _Montage UniSonic Laser cabine 2,444 x 3,410 x 2,740 m_rev-0.dft

48.20.01.2705
Cepro UniSonic Paneel D80

Pos.nr.	Zahl	Länge
501	1 st.	L= 2266 mm

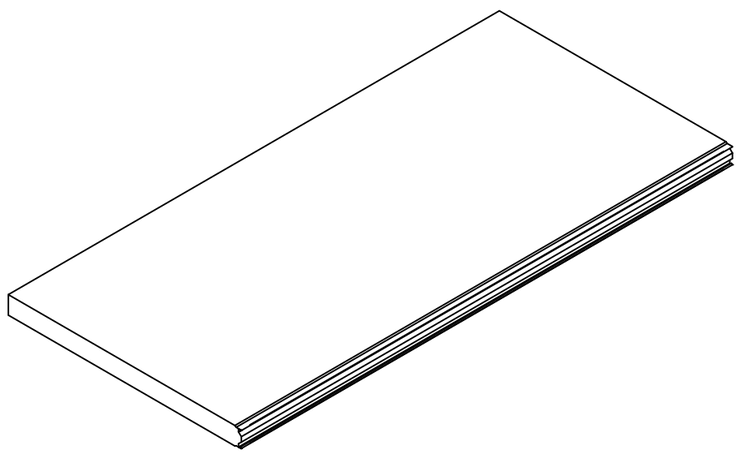

48.20.01.2705
Cepro UniSonic Paneel D80

Pos.nr.	Zahl	Länge
502	1 st.	L= 2266 mm

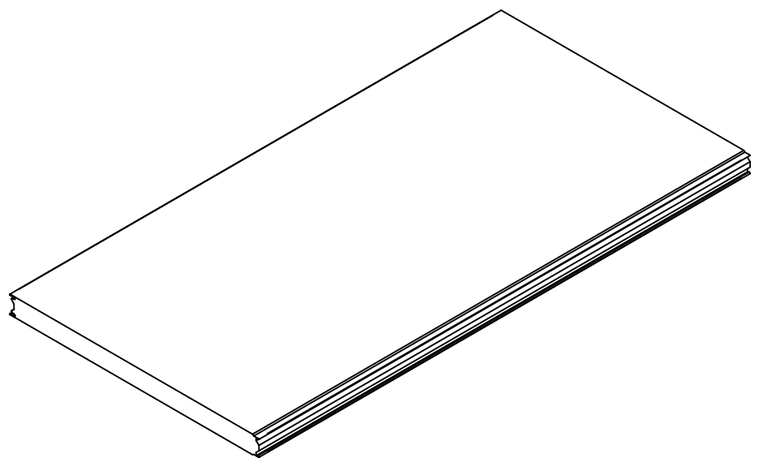

48.20.01.2705
Cepro UniSonic Paneel D80

Pos.nr.	Zahl	Länge
503	1 st.	L= 2266 mm

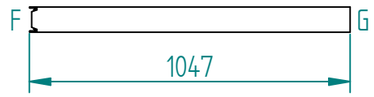

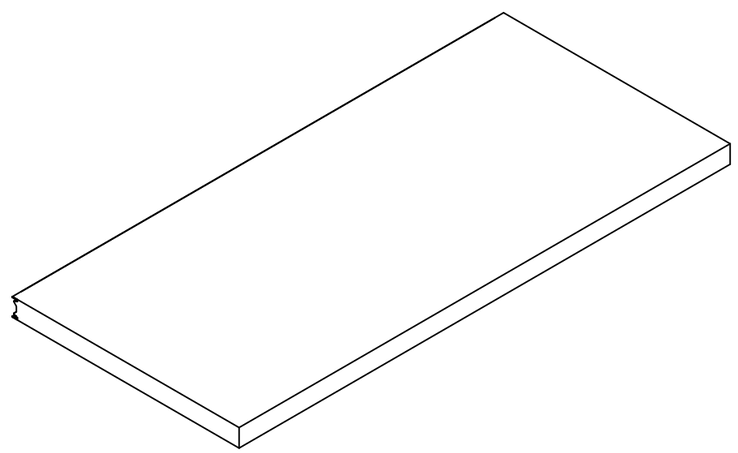

F = Frau
M = Mann
G = Gesägt

Dachpaneele

	NAME	DATE	SIZE
DRAWN	MdJ	28-1-2025	A3
CHECKED	GvdW	31-1-2025	REV 1
	WEIGHT:		
TOLERANCES ACCORDING TO ISO2768-1			SCALE:

projection

UNLESS OTHERWISE SPECIFIED
DIMENSIONS ARE IN MILLIMETERS
ANGLES ±X.X°
2 PL ±X.XX 3 PL ±X.XXX

CEPRO LEADING IN WELDING SAFETY
CEPRO International B.V.
Provinciënbaan 16, 5121 DL
Rijen - The Netherlands

Montage UniSonic cabine 3,4 x 2,7 m.
Heidenbluth Ostring 16 Fuldabruck

Ordernr.: 3250400098
Delivery: Woche 7 - 2025

Sheet 8 of 9

G:\Dossiers vanaf 2016\UniSonic\Duitsland\2025\Heidenbluth Ostring 16 Fuldabruck\3250400098 _Montage UniSonic Laser cabine 2444 x 3,410 x 2,740 m._rev-0.dft

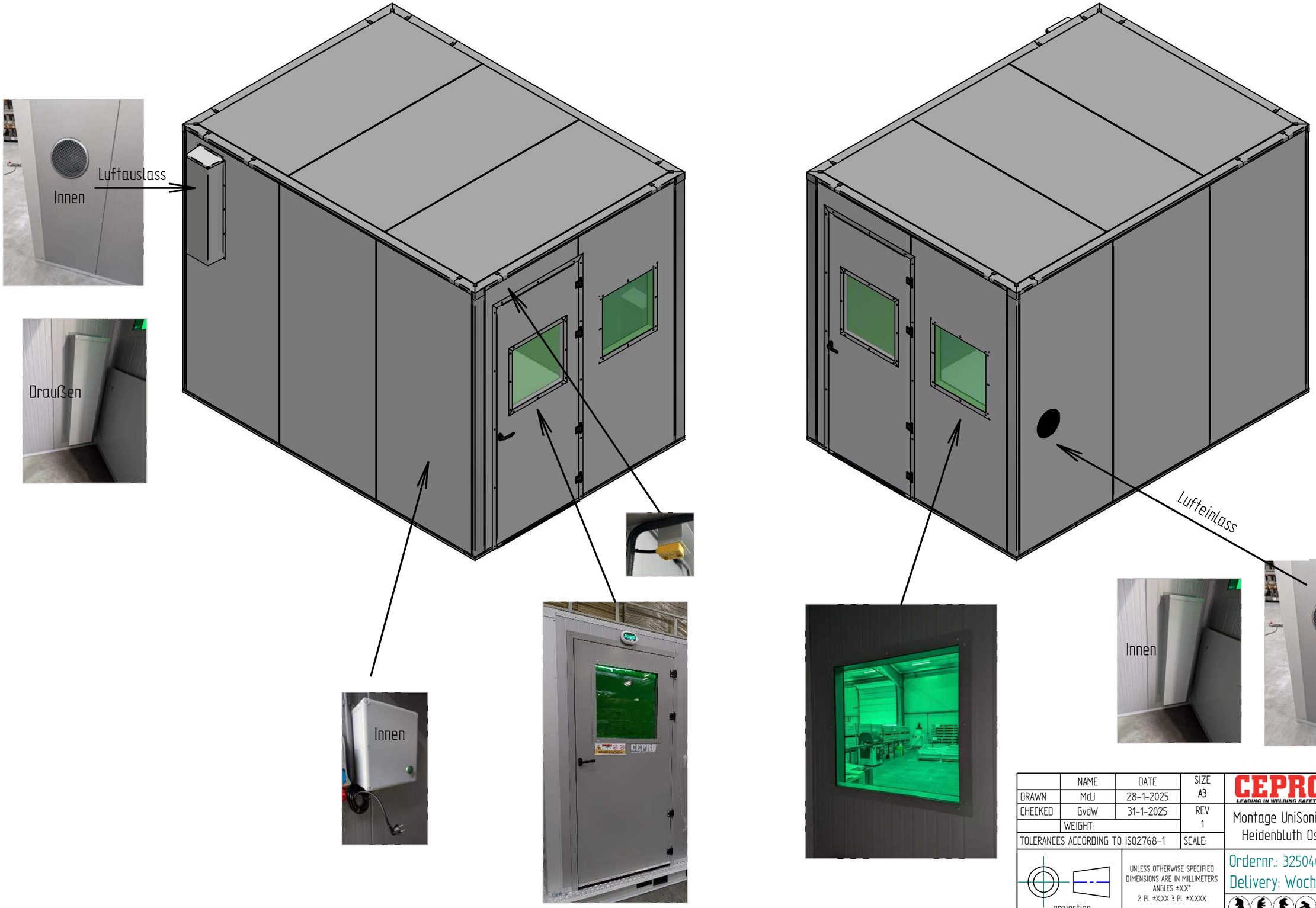

	NAME	DATE	SIZE
DRAWN	MdJ	28-1-2025	A3
CHECKED	GvdW	31-1-2025	REV 1
	WEIGHT:		
TOLERANCES ACCORDING TO ISO2768-1			SCALE:

projection

UNLESS OTHERWISE SPECIFIED
DIMENSIONS ARE IN MILLIMETERS
ANGLES ±X.X°
2 PL ±X.XX 3 PL ±X.XXX

CEPRO® LEADING IN WELDING SAFETY

CEPRO International B.V.
Provincienbaan 16, 5121 DL
Rijen - The Netherlands

Montage UniSonic cabine 3,4 x 2,7 m.
Heidenbluth Ostring 16 Fuldabruck

Ordernr.: 3250400098
Delivery: Woche 7 - 2025

Sheet 9 of 9

G:\Dossiers vanaf 2016\UniSonic\Duitsland\2025\Heidenbluth Ostring 16 Fuldabruck\3250400098 _Montage UniSonic Laser cabine 2444 x 3,410 x 2,740 m_rev-0.dft

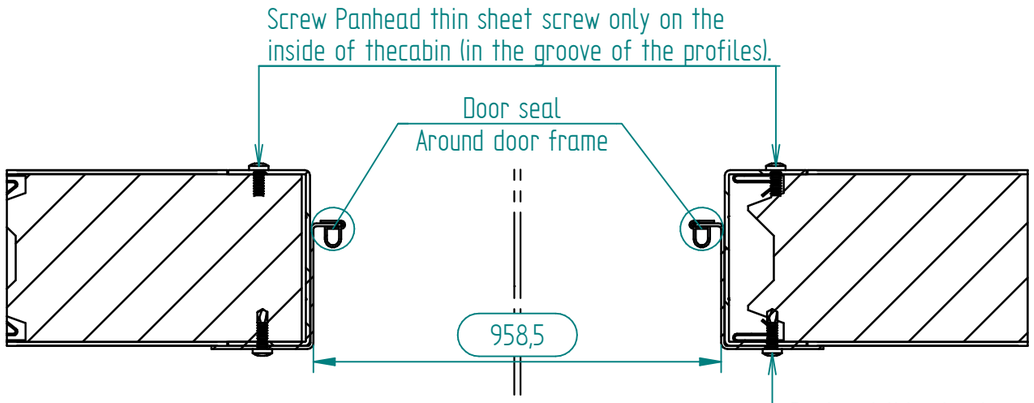

SECTION A-A
1:3

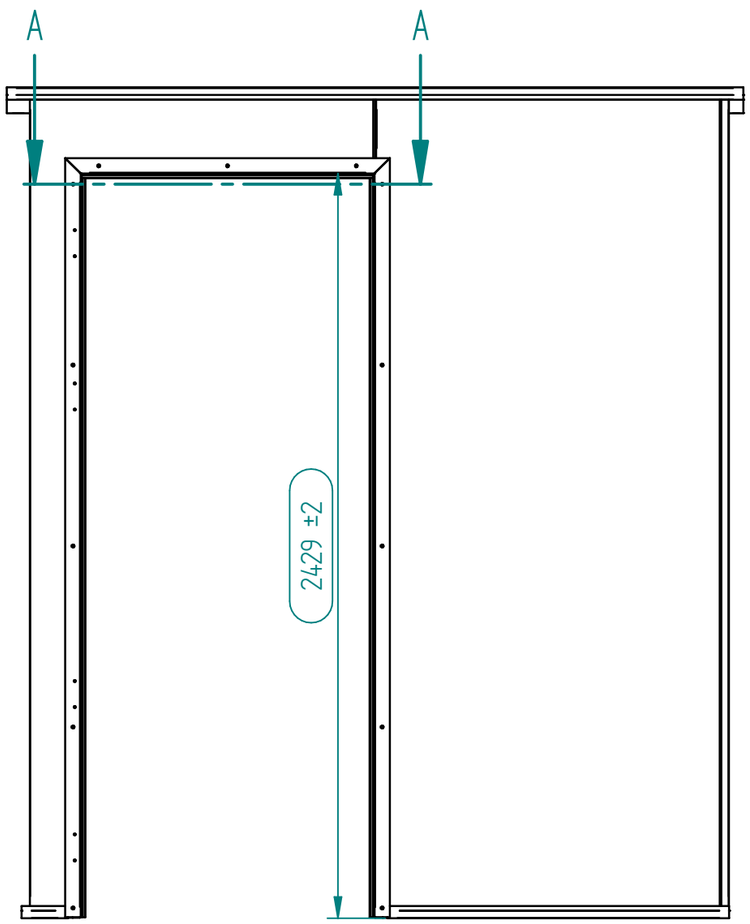

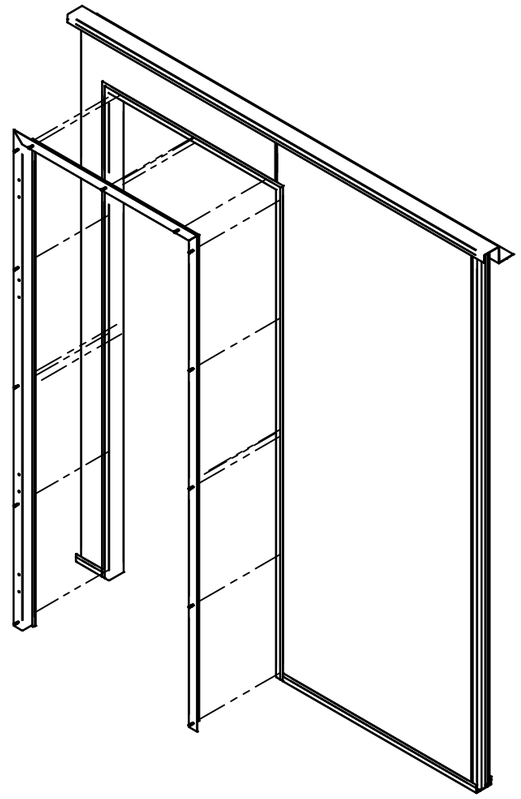

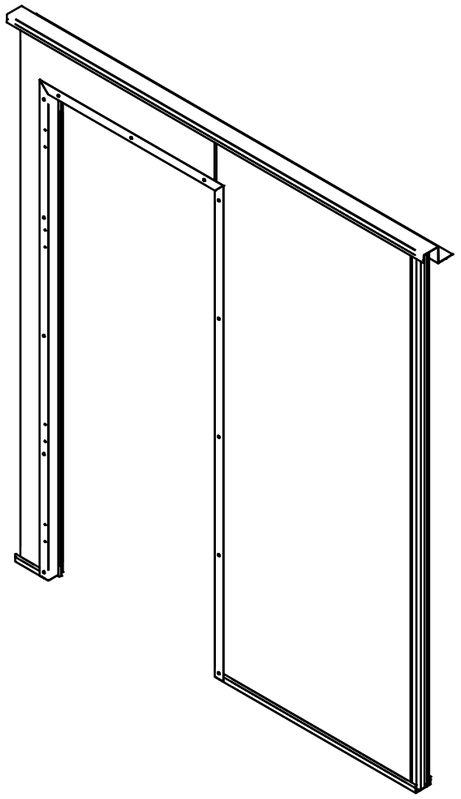

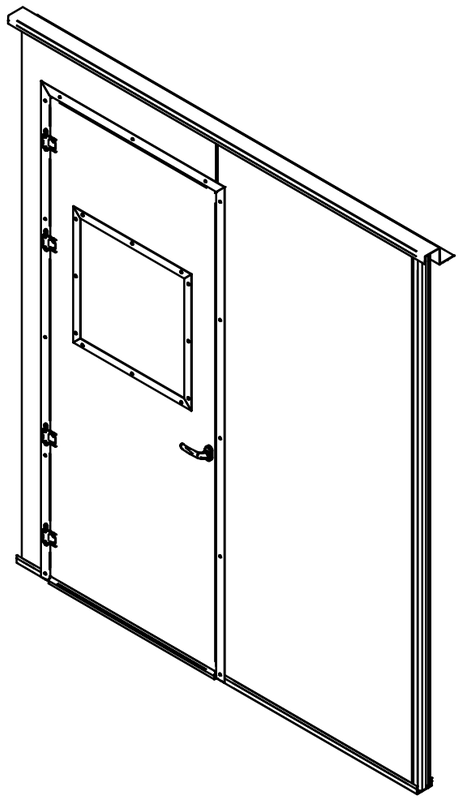

Panhead thin sheet screw Φ4,2x 16 mm
13 pcs

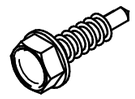

Self-drilling screw with hex. head Φ4.8x19 mm
DIN 7504 - 8 pcs

	NAME	DATE	SIZE
DRAWN	Cepro	6-1-2025	A3
CHECKED	MH	9-1-2025	REV 0
	WEIGHT: 0.0 kg		
TOLERANCES ACCORDING TO ISO2768-1			SCALE:

CEPRO International B.V.
Provinciënbaan 16, 5121 DL
Rijen - The Netherlands

General Manual Cepro doors frame installation UniSonic

projection

UNLESS OTHERWISE SPECIFIED
DIMENSIONS ARE IN MILLIMETERS
ANGLES ±X.X°
2 PL ±X.XX 3 PL ±X.XXX

Ordernr.: N/A
Delivery: N/A

Sheet 1 of 5

G:\tekeningen\01.Tekeningen bibliotheek\04_Cabinebouw\UniSonic draaideur\06.Handleiding\General Manual Cepro doors frame installation UniSonic_rev-0.dft

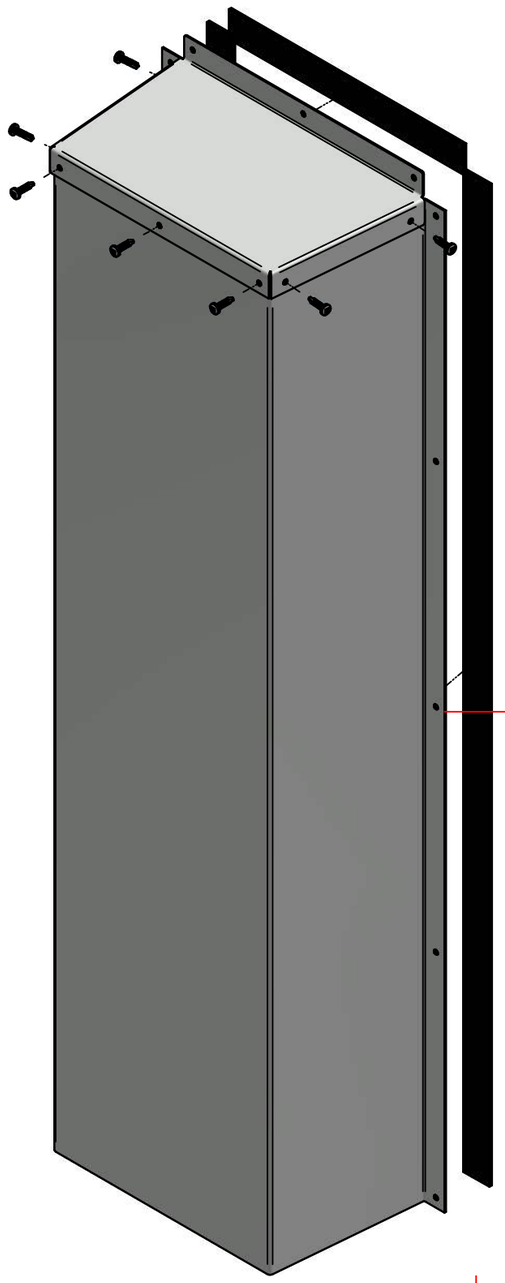

Insulation tape 3 x 30 mm

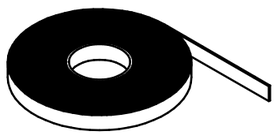

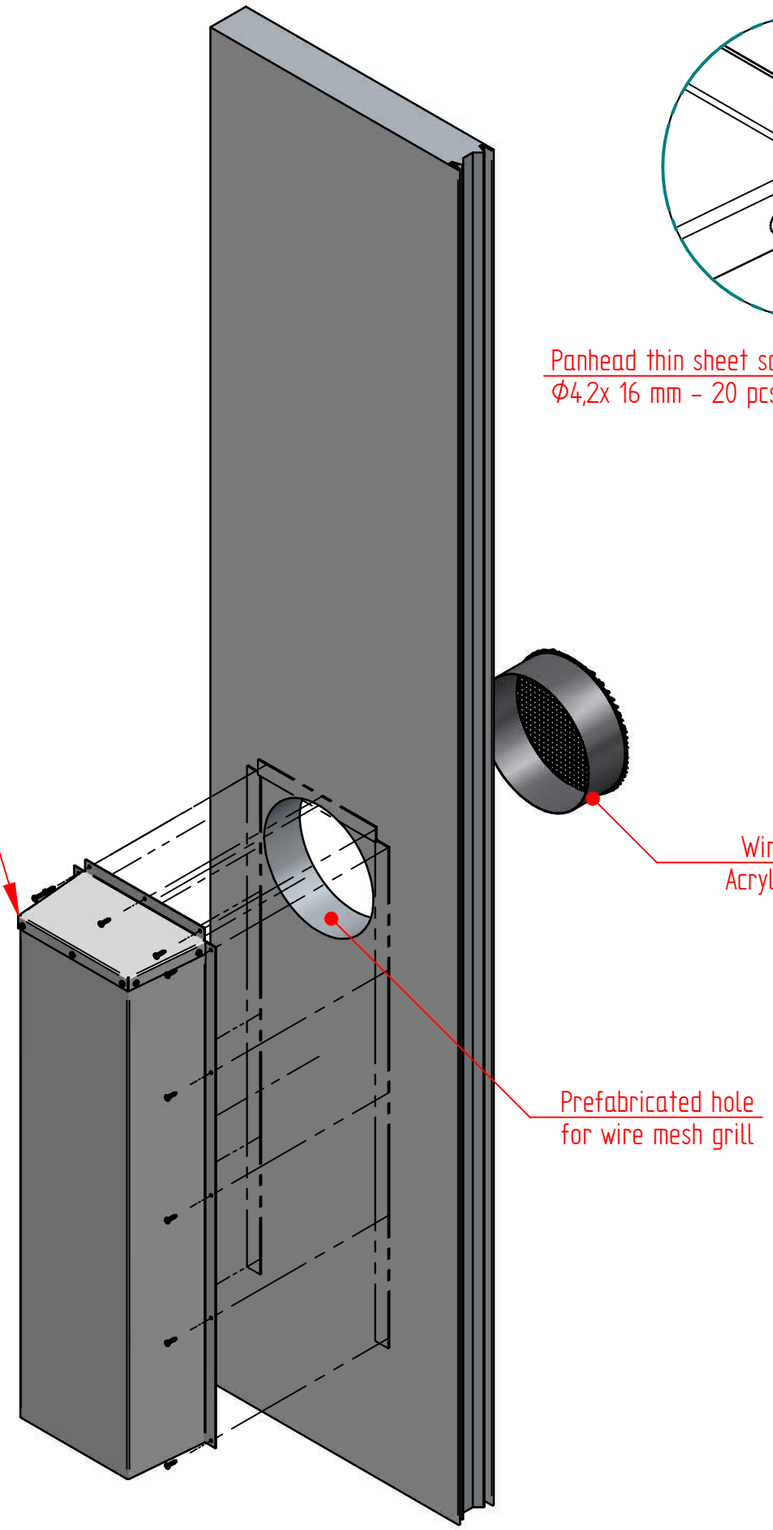

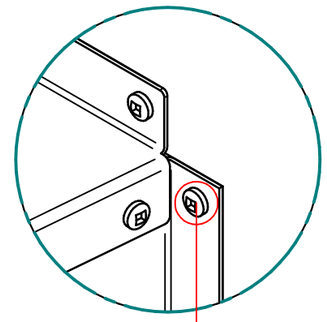

Panhead thin sheet screw
Φ4,2x 16 mm - 20 pcs

Wire mesh grill
Acrylic kit sealant

Prefabricated hole
for wire mesh grill

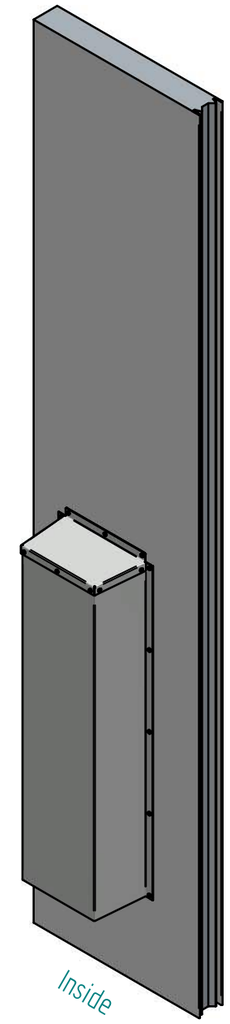

Inside

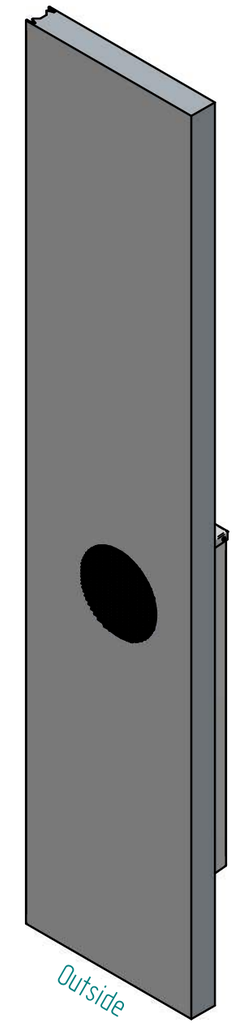

Outside

Installation Air-inlet in wall panel

Make all seams airtight before placing the Inlet air duct.

	NAME	DATE	SIZE	CEPRO International B.V. Provinciënbaan 16, 5121 DL Rijen - The Netherlands
DRAWN	Cepro	2-1-2025	A3	
CHECKED	MH	9-1-2025	REV 1	Mounting instruction
	WEIGHT: 5142.5 kg			
TOLERANCES ACCORDING TO ISO2768-1			SCALE:	

projection

UNLESS OTHERWISE SPECIFIED
DIMENSIONS ARE IN MILLIMETERS
ANGLES ±X.X°
2 PL ±X.XX 3 PL ±X.XXX

Air-INLET

Sheet 1 of 1

G:\tekeningen\UniSonic cabinebouw\Montage instructie\US_AI_vs1.23012025 Montage Air inlet.dft

Included

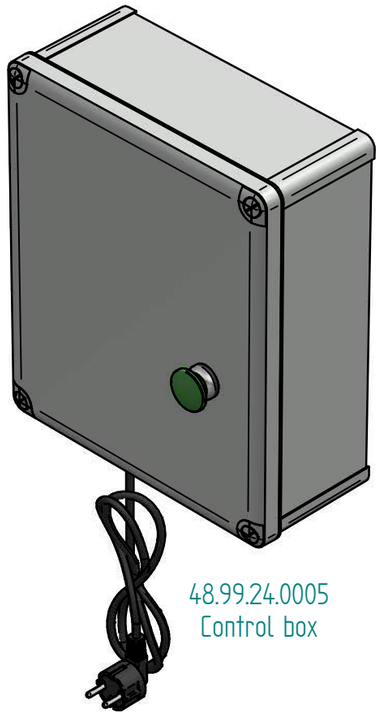

48.99.24.0005
Control box

48.99.24.0006
Magnetic door switch
incl. 5 mtr cable

48.99.24.0014
Sensor supports (2-part set)

DIN912_Bolt M4x20
DIN9021_Washer M4
DIN934_Nut M4

Selfdrilling screw
4.2x16mm

48.99.24.0007
LED laser warning sign

48.99.24.0010
Safety warning, sticker set (2 pcs)

NOT included

control cable, LED warning sign
(not included)

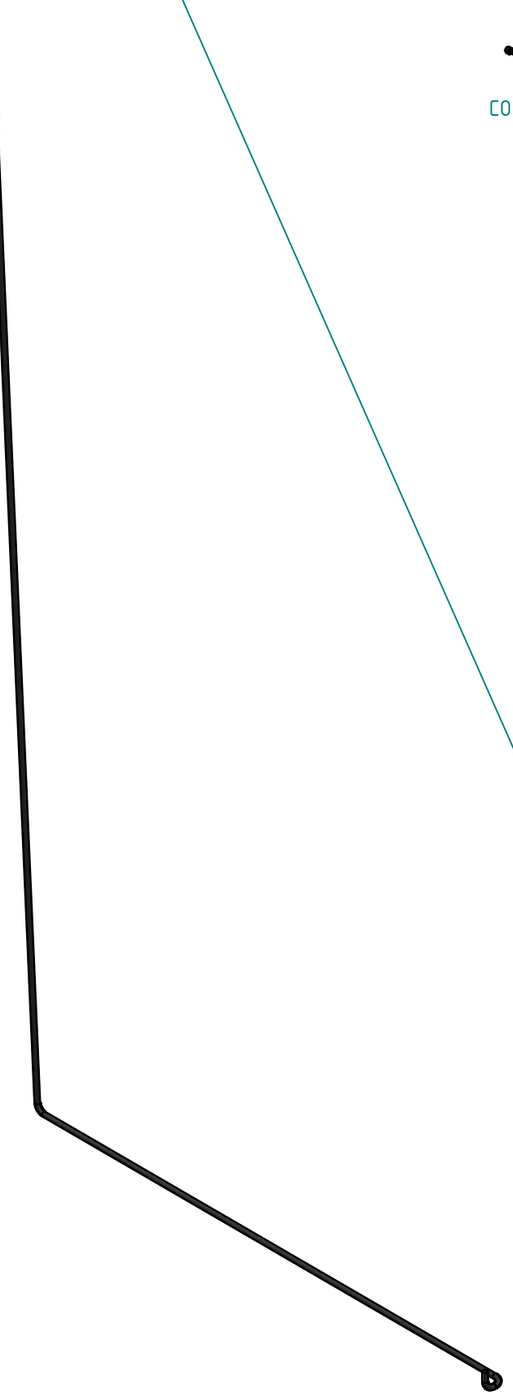

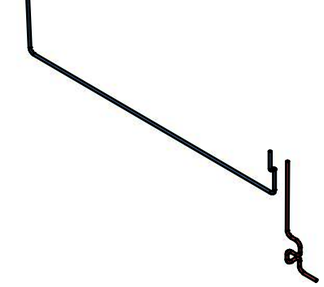

control cable to
laser handheld welding machine
(not included)

	NAME	DATE	SIZE
DRAWN	Cepro	8-1-2025	A3
CHECKED	MH	9-1-2025	REV 1
TOLERANCES ACCORDING TO ISO2768-1			SCALE:

projection

UNLESS OTHERWISE SPECIFIED
DIMENSIONS ARE IN MILLIMETERS
ANGLES ±X.X°
2 PL ±X.XX 3 PL ±X.XXX

CEPRO International B.V.
Provincienbaan 16, 5121 DL
Rijen - The Netherlands

UniSonic booth

Manual interlock

Sheet 1 of 5

G:\tekeningen\UniSonic cabinebouw\Montage instructie\US_IS_vs123012025 Montage interlock systeem UniSonic lasercabine.dft

Be aware" the interlock system should be installed by a licensed electrician "

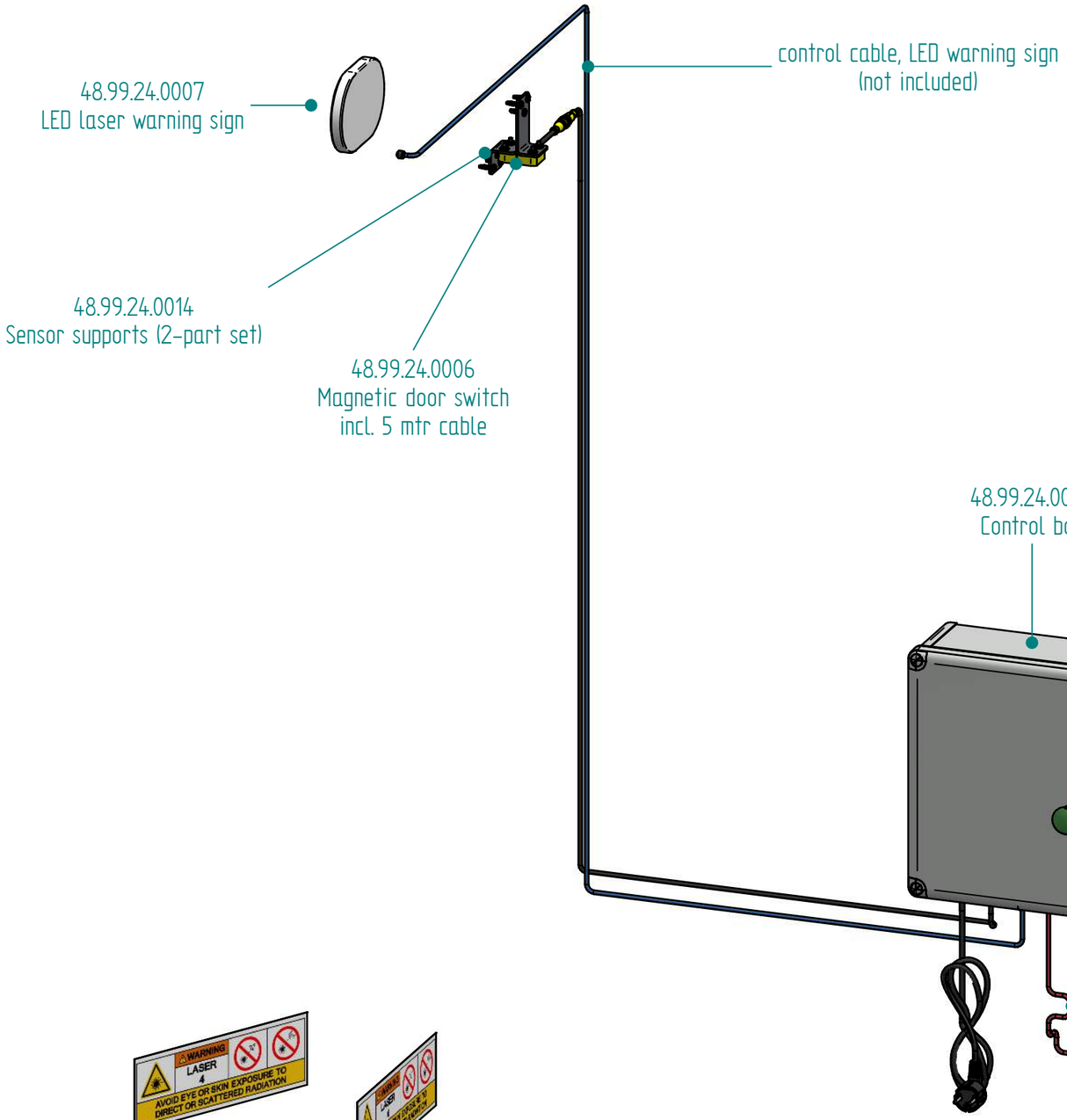

The control box is not a power supply or control box fo
the welding device itself or any other equipment or lighting.
In other words, the main power supply, sockets, lights, etc.,
must be provided by the end customer or an installer designated by them.

48.99.24.0010
Safety warning, sticker set (2 pcs)

	NAME	DATE	SIZE
DRAWN	Cepro	8-1-2025	A3
CHECKED	MH	9-1-2025	REV 1
TOLERANCES ACCORDING TO ISO2768-1			SCALE:

projection

UNLESS OTHERWISE SPECIFIED
DIMENSIONS ARE IN MILLIMETERS
ANGLES ±X.X°
2 PL ±X.XX 3 PL ±X.XXX

CEPRO® LEADING IN WELDING SAFETY

CEPRO International B.V.
Provincienbaan 16, 5121 DL
Rijen - The Netherlands

UniSonic booth

Manual interlock

Sheet 2 of 5

G:\tekeningen\UniSonic cabinebouw\Montage instructie\US_IS_vs1.23012025 Montage interlock systeem UniSonic lasercabine.dft

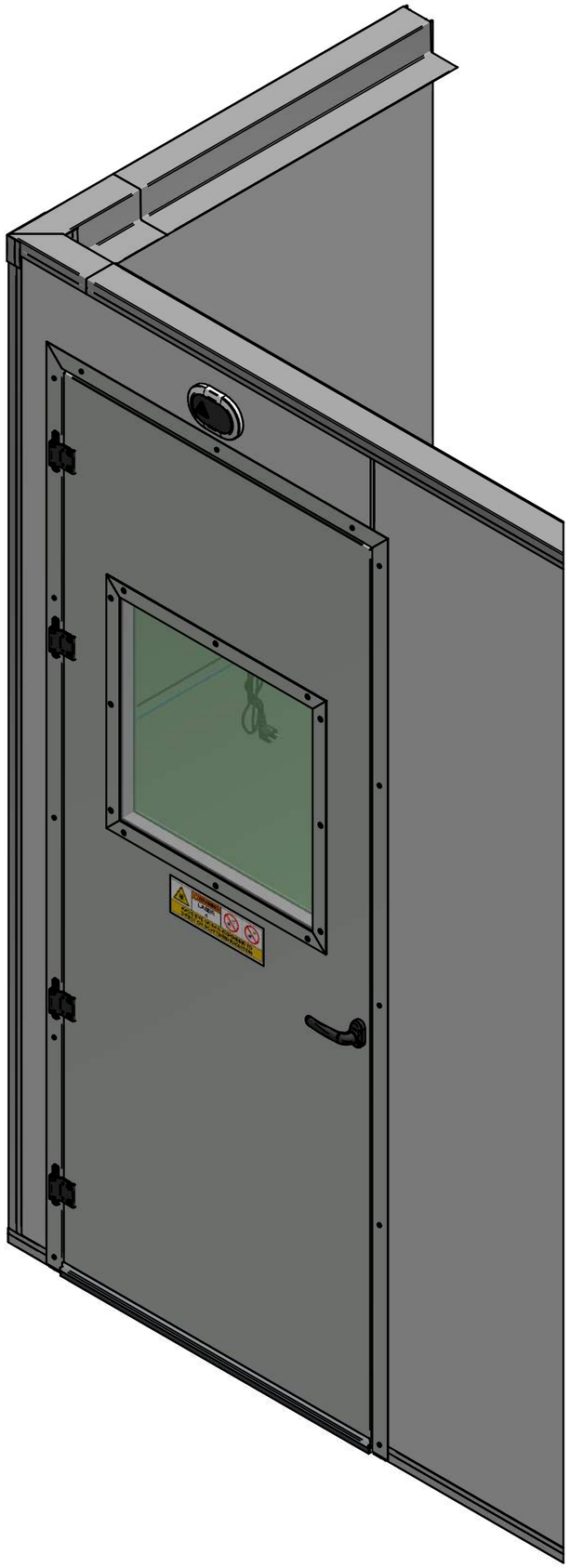

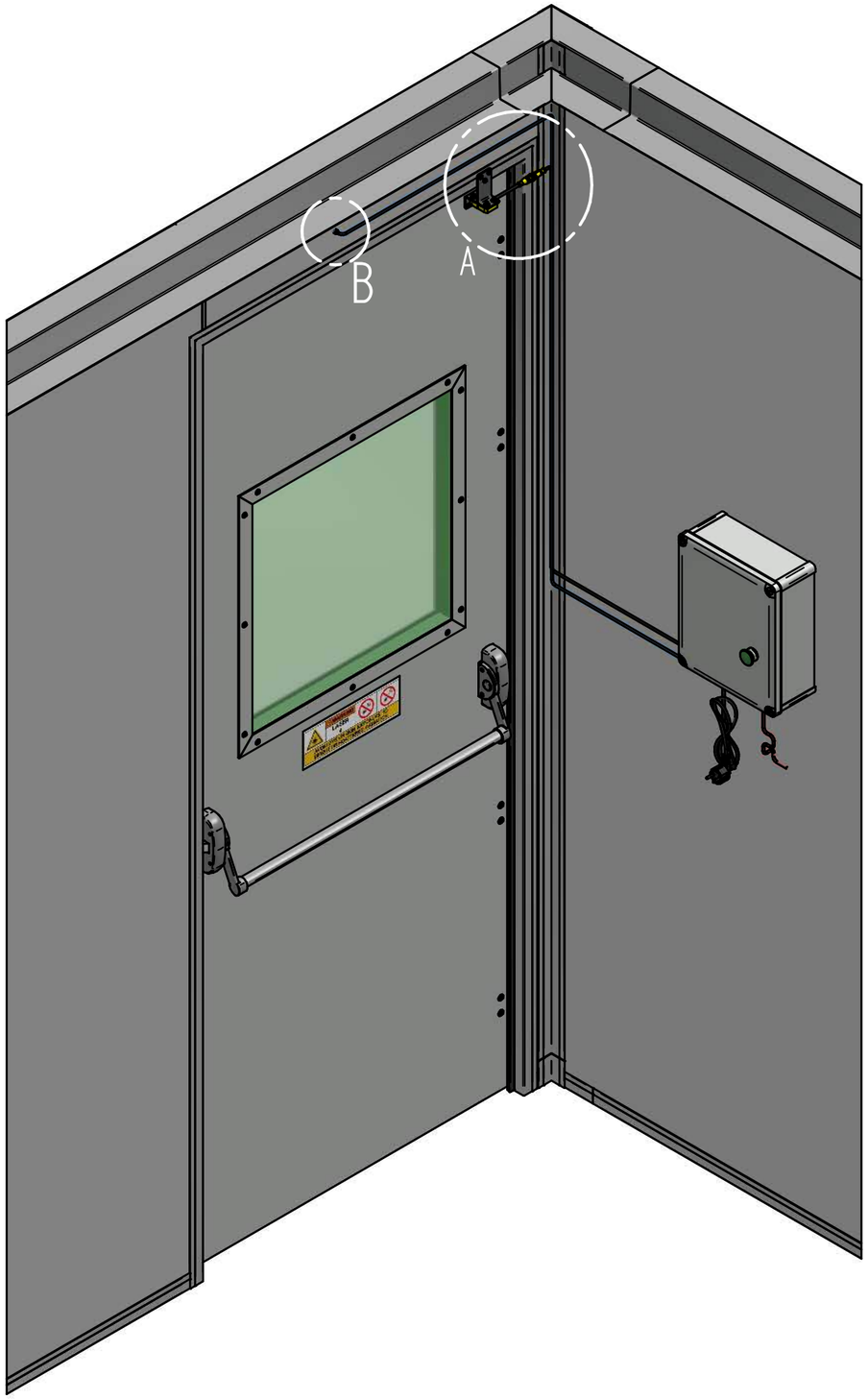

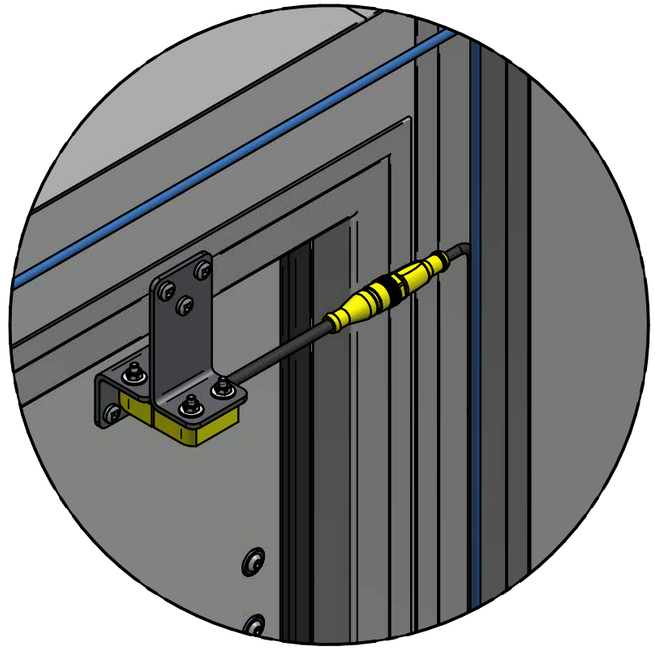

DETAIL A

Drill hole in UniSonic element for control cable, LED warning sign. (Use cable grommet)

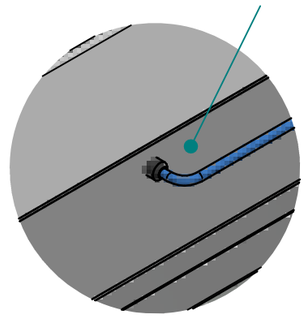

DETAIL B

	NAME	DATE	SIZE
DRAWN	Cepro	8-1-2025	A3
CHECKED	MH	9-1-2025	REV 1
TOLERANCES ACCORDING TO ISO2768-1			SCALE:

projection

UNLESS OTHERWISE SPECIFIED
DIMENSIONS ARE IN MILLIMETERS
ANGLES ±X.X°
2 PL ±X.XX 3 PL ±X.XXX

CEPRO® LEADING IN WELDING SAFETY

CEPRO International B.V.
Provincienbaan 16, 5121 DL
Rijen - The Netherlands

UniSonic booth

Manual interlock

Sheet 3 of 5

G:\tekeningen\UniSonic cabinebouw\Montage instructie\US_IS_vs123012025 Montage interlock systeem UniSonic (asercabine.dft

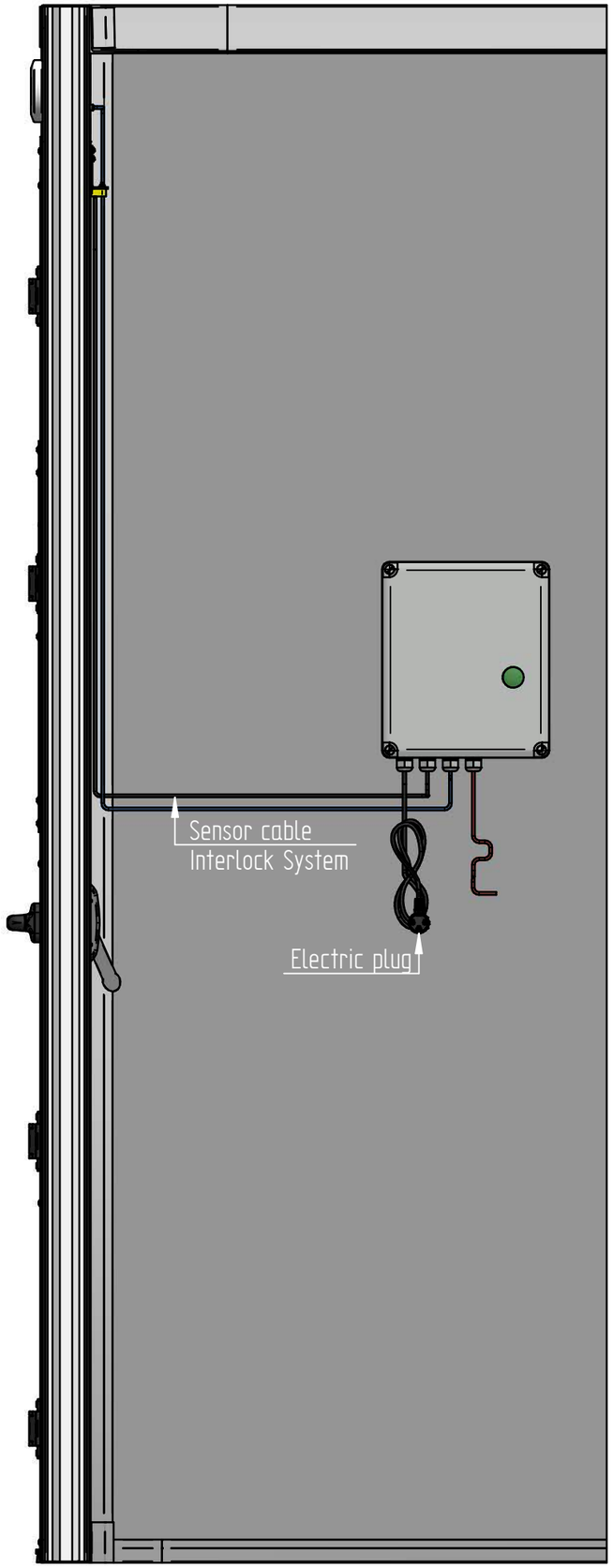

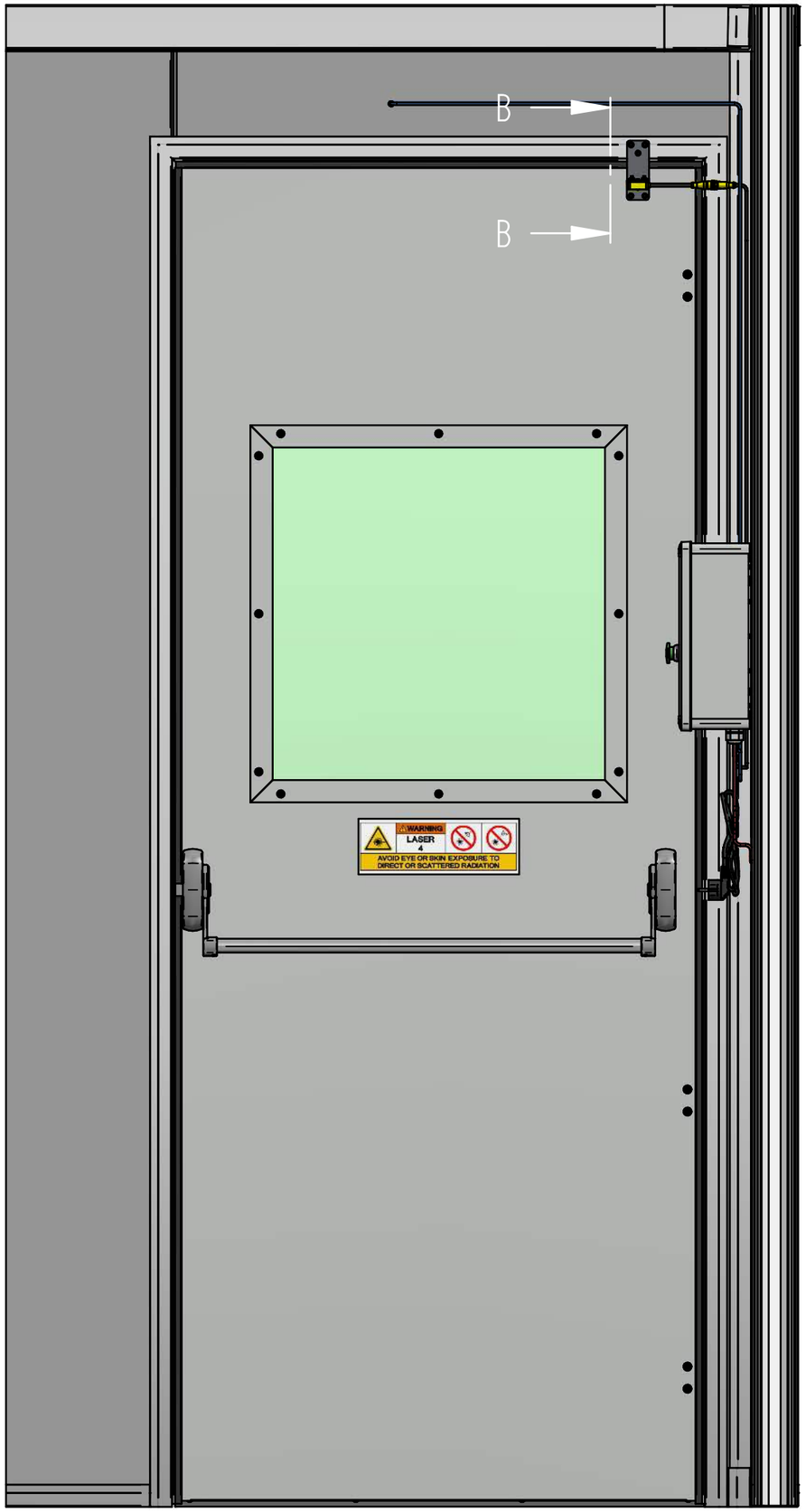

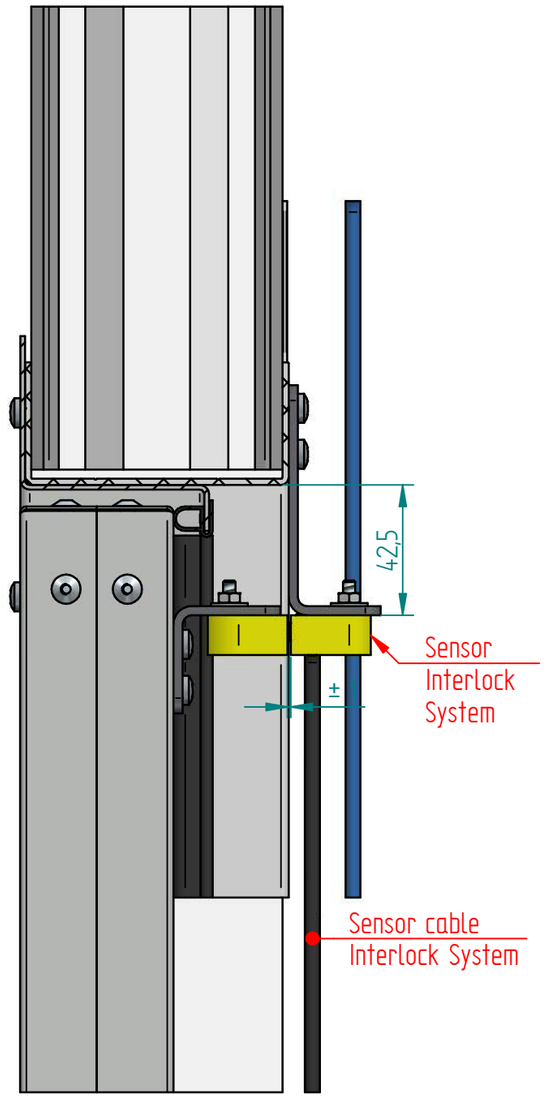

SECTION B-B

	NAME	DATE	SIZE
DRAWN	Cepro	8-1-2025	A3
CHECKED	MH	9-1-2025	REV 1
TOLERANCES ACCORDING TO ISO2768-1			SCALE:

projection

UNLESS OTHERWISE SPECIFIED
DIMENSIONS ARE IN MILLIMETERS
ANGLES ±X.X°
2 PL ±X.XX 3 PL ±X.XXX

CEPRO® LEADING IN WELDING SAFETY

CEPRO International B.V.
Provincienbaan 16, 5121 DL
Rijen - The Netherlands

UniSonic booth

Manual interlock

Sheet 4 of 5

G:\tekeningen\UniSonic cabinebouw\Montage instructie\US_IS_vs123012025 Montage interlock systeem UniSonic Lasercabine.dft

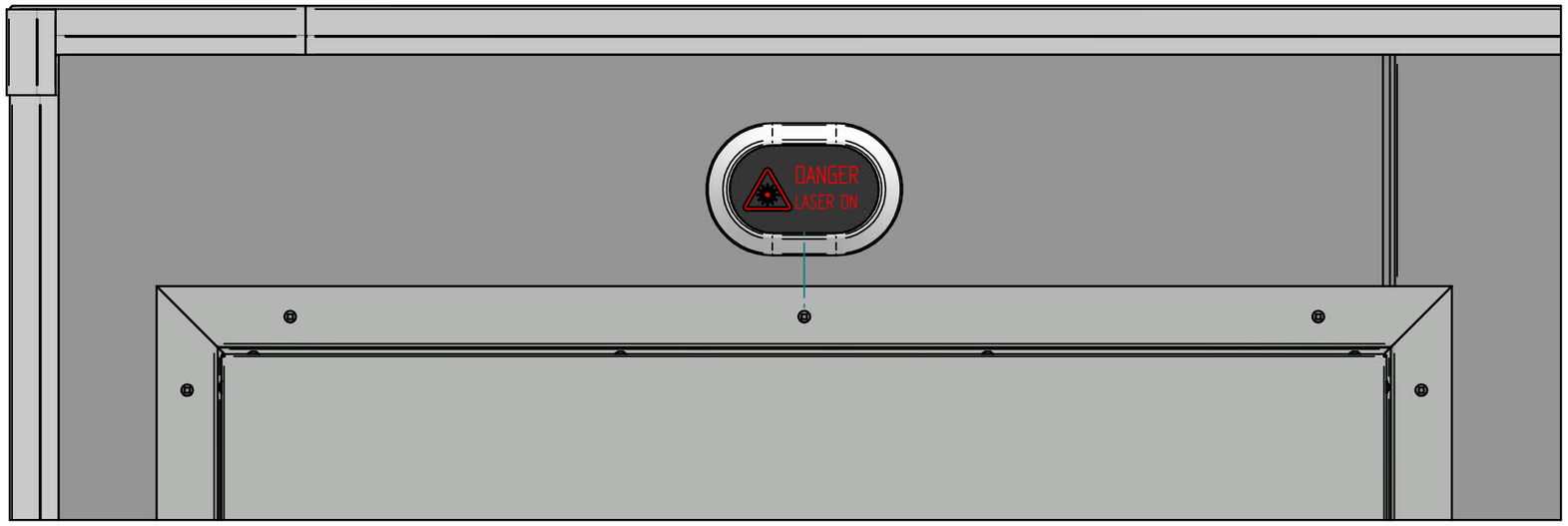

Laser in Use

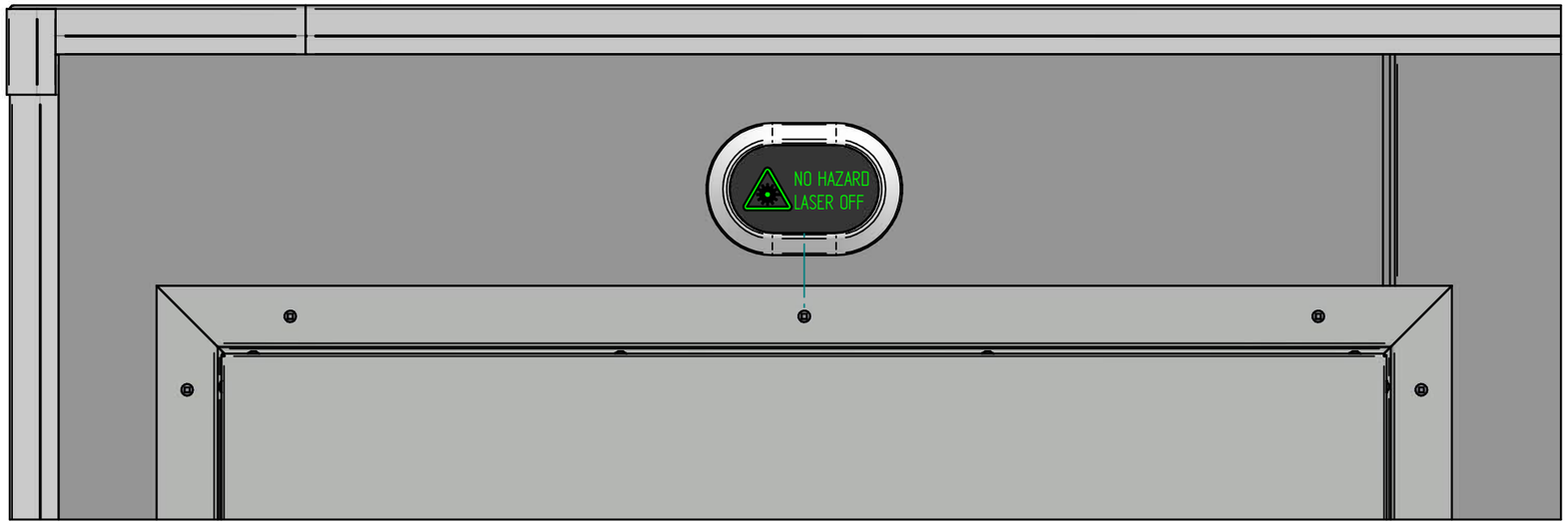

Safe to enter

	NAME	DATE	SIZE
DRAWN	Cepro	8-1-2025	A3
CHECKED	MH	9-1-2025	REV 1
TOLERANCES ACCORDING TO ISO2768-1			SCALE:

projection

UNLESS OTHERWISE SPECIFIED
DIMENSIONS ARE IN MILLIMETERS
ANGLES ±X.X°
2 PL ±X.XX 3 PL ±X.XXX

CEPRO® LEADING IN WELDING SAFETY

CEPRO International B.V.
Provincienbaan 16, 5121 DL
Rijen - The Netherlands

UniSonic booth

Manual interlock

Sheet 5 of 5

G:\tekeningen\UniSonic cabinebouw\Montage instructie\US_IS_vs123012025 Montage interlock systeem UniSonic lasercabine.dft